REV.	DESCRIPTION	NAME	DATE
A	NEWS ISSUE		

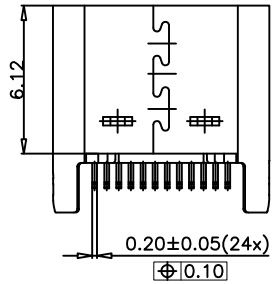

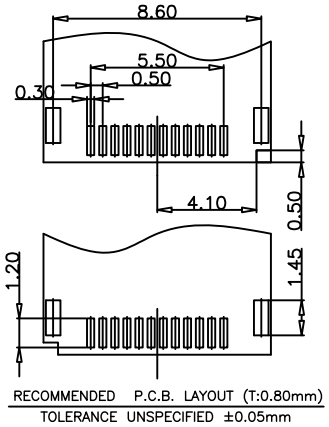

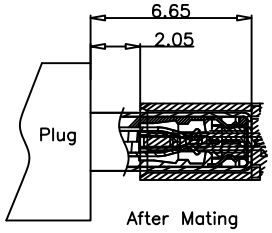

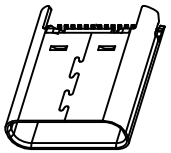

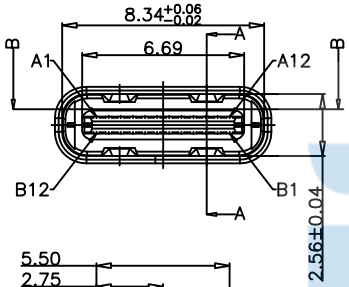

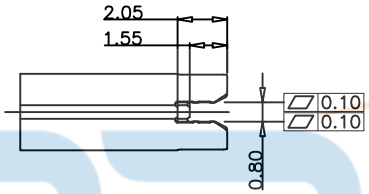

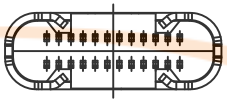

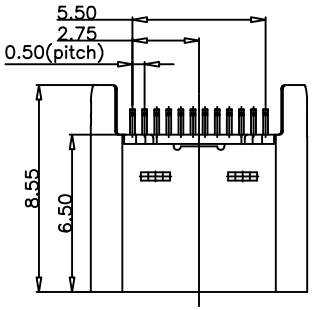

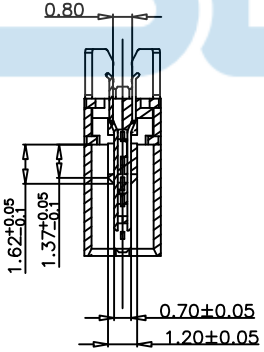

SECTION:A-A

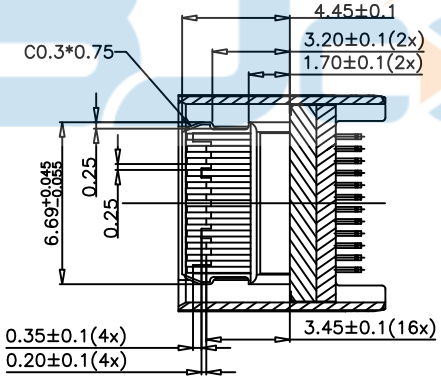

SECTION:B-B

NOTE:

1. MATERIAL SPECIFICATION:
   1. HOUSING:HIGH TEMPERATURE RESISTANT PLASTIC,LCP UL94 V-0.
   2. CONTACTS:COPPER ALLOY C7025
   3. MID PLATE: STAINLESS STEEL SUS301
   4. FRONT SHELL: STAINLESS STEEL SUS304
2. PLATING SPECIFICATION:
   2-1. CONTACTS:
   Ni 50u" MIN. UNDER PLATED OVER ALL.
   Au 1u PLATED ON THE FUNCTIONAL AREA OF CONTACT.
   (GOLD PLATING THICKNESS FOLLOW)
   PLATING SPECIFICATIONS OF THE SOLDER AREA FOLLOW
   2-2. FRONT SHELL:
   Ni 30u" MIN. UNDER PLATED OVER ALL.
   2-3. SHIELD PLATE&EMI PLATE:
   CLEAR ONLY
3. MECHANICAL PERFORMANCE,
   3-1. INSERTION FORCE: 0.5~2.0kgf.
   3-2. REMOVAL FORCE: 0.8kgf~2.0kgf.
   3-3. DURABILITY: 10000 CYCLES.
4. ELECTRICAL PERFORMANCE,
   4-1. CURRENT RATING:3.0A FOR VBUS; 1.25A MAX FOR OTHER.
   VOLTAGE RATING:5.0V
   4-2. LLCR:
   VBUS & GND PINS AND OTHER PINS: 40mΩ/PIN MAX.
   SHIELD: 50mΩ/MAX.
   LLCR MAX. CHANGE OF ALL PINS: 10mΩ.
   4-3. INSULATION RESISTANCE: 100MΩ MIN
   4-4. DIELECTRIC WITHSTAND VOLTAGE,AC 100V FOR 1 MINUTE.
5. ENVIRONMENTAL PERFORMANCE:
   OPERATING TEMPERATURE: -25° C~+85° C.
6. IR REFLOW:
   THE PEAK TEMPERATURE ON THE BOARD SHALL
   BE MAINTAINED FOR 10 SECONDS AT 260° C.
7. SALT SPRAY TEST:24H

USB TYPE-C PIN ASSIGNMENTS

PIN NUMBER	SIGNAL NAME	PIN NUMBER	SIGNAL NAME
A1	GND	B12	GND
A2	SSTXp1	B11	SSRXp1
A3	SSTXn1	B10	SSRXn1
A4	VBUS	B9	VBUS
A5	CC1	B8	SBU2
A6	Dp1	B7	Dn2
A7	Dn1	B6	Dp2
A8	SBU1	B5	CC2
A9	VBUS	B4	VBUS
A10	SSRXn2	B3	SSTXn2
A11	SSRXp2	B2	SSTXp2
A12	GND	B1	GND

TOLERANCE UNSPECIFIED
.
.0 ±0.35
.00 ±0.25
.000 ±0.15
X.° ±2.00°
CUSTOMER DRAWING

深圳市步步精科技有限公司

TITLE: TYPE-C 24P 母座 直立式 H=6.50 夹板0.80

DRAWN/ DATE	设计	TSP	SIZE:A4	UNIT:MM.	PART.NO: 126-22A-240004-J8G	
CHECKED/ DATE	审核	LYX	SCALE: 1:1		PROJECTION	REV.: 版本
APPROVED/ DATE	核准	LJP	DWG. PATH		0500-1	SHEET: 页码

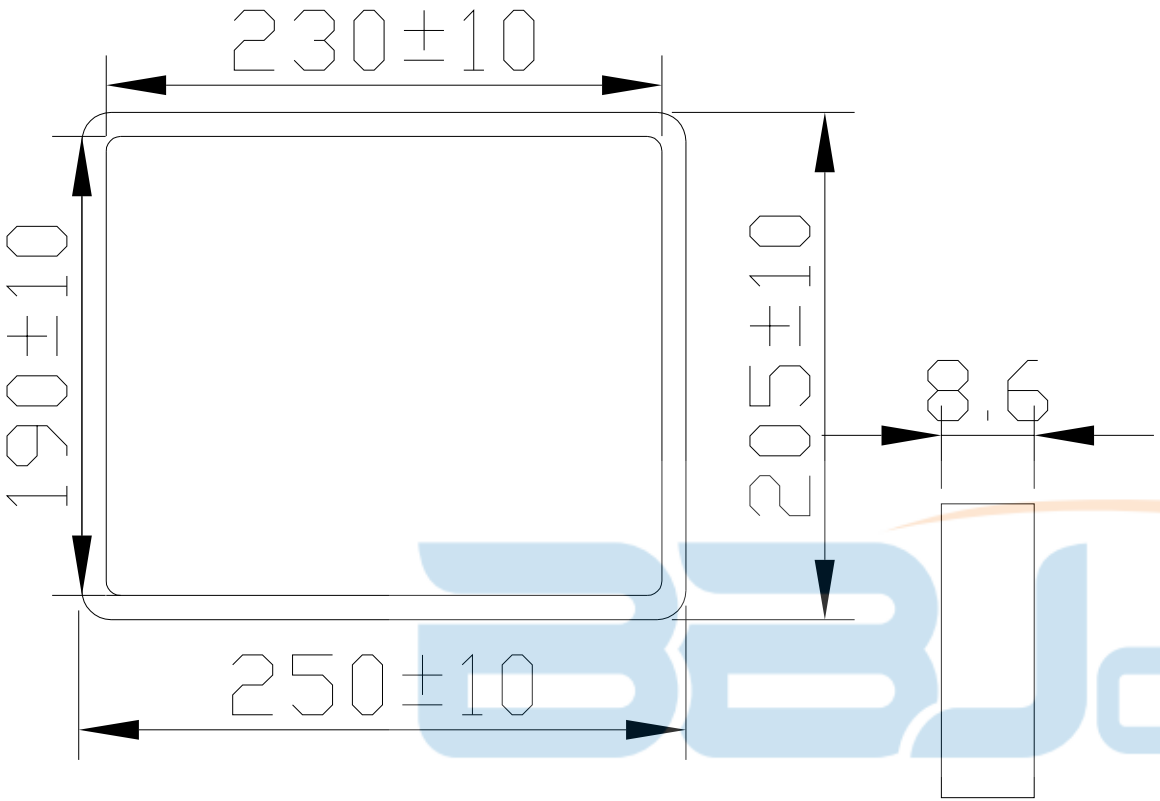

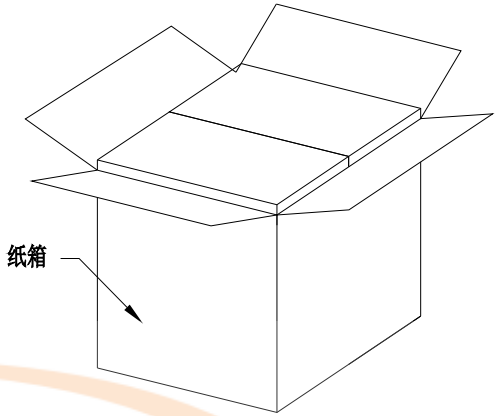

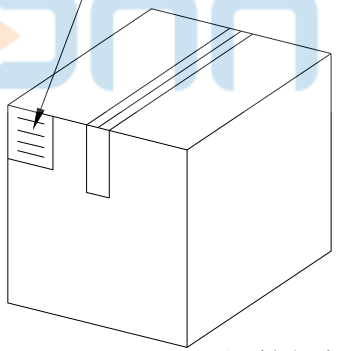

纸箱规格：350*210*290

1.包装要求：

1.1 每盒吸塑盒包装100 pcs；

1.2 每20盘放一箱，共计2000PCS；

1.3 纸箱外贴上标签

TOLERANCE UNSPECIFIED . .0 ±0.35 .00 ±0.25 .000 ±0.15 X.° ±2.00° CUSTOMER DRAWING			深圳市步步精科技有限公司			
			TITLE: TYPE-C 24P 母座 直立式 H=6.50 夹板0.80			
DRAWN/DATE	设计	TSP	SIZE:A4	UNIT:MM.	PART.NO: 126-22A-240004-J8G	
CHECKED/DATE	审核	LYX	SCALE: 1:1		PROJECTION	REV.: 版本
APPROVED/DATE	核准	LJP	DWG. PATH		0500-1	SHEET: 页码