bbJconn Since 1987 步步精科技

REV.	ECN NO.	CONTENT	DATE	ENGINEER
A0		Initial release		LYX

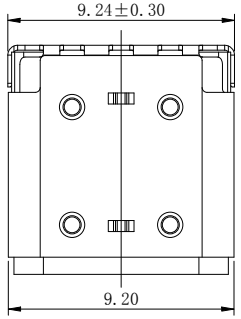

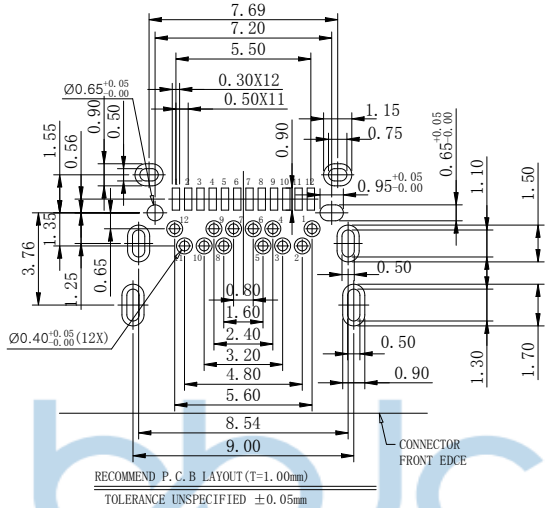

NOTE:
1.MATERIAL:
1.1 INSULATOR: HIGH TEMPERATURE PLASTIC UL 94 V-0;
1.2 CONTACT: COPPER ALLOY
1.3 SHELL:STAINLESS STEEL
2.ELECTRICAL CHARACTERISTICS;
2.1 CONTACT RESISTANCE: 40mΩ Max FOR INITIAL. 10mΩ CHANGE AFTER TEST. MEASURE AT 20mV, 100mA.
2.2 CONTACT CURRENT RATING: 5A FOR VBUS PIN; 1.25A FOR VCONN PIN.
2.3 DIELECTRIC WITHSTANDING VOLTAGE: 100V AC R.M.S.
2.4 INSULATION RESISTANCE 100MΩ Min
2.5 OPERATING TEMPERATURE: -25°C ~ 85°C
3 MECHANICAL CHARACTERISTICS:
3.1 MATING FORCE: 5~20 N.
3.2 UNMATED FORCE: 8~20N AFTER TEST
3.3 DURABILITY: 10,000 CYCLES
4.PLATING
4.1 TERMINAL CONTACT: (SEE TAB) GOLD PLATING 1u" ALL OVER 50u" Min NICKEL AND 80u"Min Tin ALL OVER 50u" Min NICKEL ON SOLDER AREA
4.2 SHELL: 30u" Min. NICKEL ALL OVER,

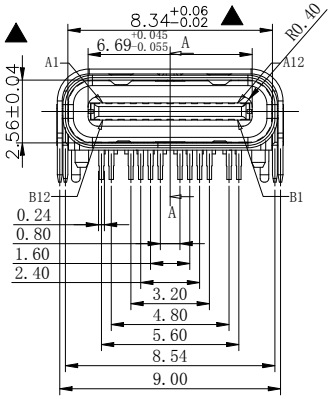

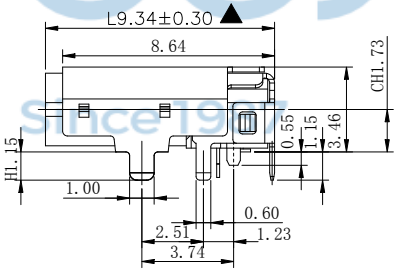

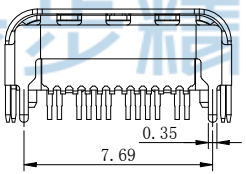

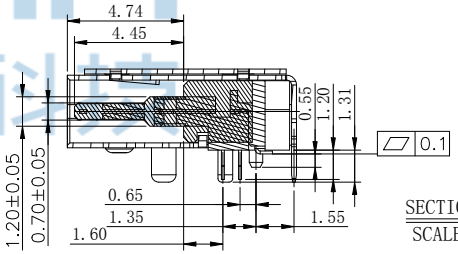

SECTION A-A
SCALE 1:1

USB TYPE-C PIN ASSIGNMENTS

PIN NUMBER	SIGNAL NAME	PIN NUMBER	SIGNAL NAME
A1	GND	B12	GND
A2	SSTXp1	B11	SSRXp1
A3	SSTXn1	B10	SSRXn1
A4	VBUS	B9	VBUS
A5	CC1	B8	SBU2
A6	Dp1	B7	Dn2
A7	Dn1	B6	Dp2
A8	SBU1	B5	CC2
A9	VBUS	B4	VBUS
A10	SSRXn2	B3	SSTXn2
A11	SSRXp2	B2	SSTXp2
A12	GND	B1	GND

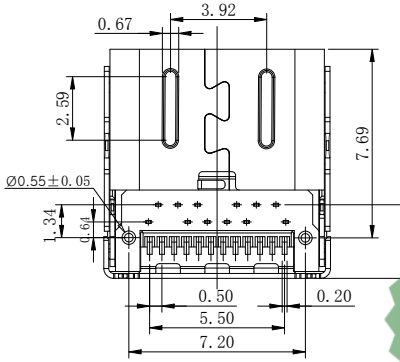

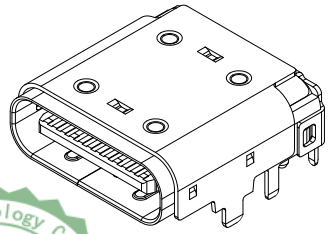

Item	Title	Material	Dispose	Q'TY
1	Shell	SUS304	Ni:30u" Min.	1PCS
2	GND Plate	SUS301		2PCS
3	Mid Plate	SUS301		1PCS
4	Contact	C7025	Mating Area: Au 1u" Solder Tails: Matt Tin	2PCS
5	InsertMolding	LCP	UL 94V-0 Black	1PCS
6	COVER	LCP	UL 94V-0 Black	1PCS

THIS DOCUMENT IS THE SOLE PROPERTY OF BBJconn Technology Co.,Ltd. Corporation AND SHOULD NOT BE USED IN WHOLE OR IN PART WITHOUT PRIOR WRITTEN PERMISSION.

深圳市步步精科技有限公司

.X: ±0.38 X°: ±2°
.XX: ±0.25 .X°: ±1°
.XXX: ±0.13 .XX°: ±1°

NAME: TYPE-C 24P 母座 板上六脚插 带柱 L=9.34 CH1.73 SMT 双壳 带后盖

APPD.	JM_Zheng	PJ. NO.: 126-221-240023-J8G	
CHKD.	TSP	SIZE: A4	DRW NO.:
DR.	LYX	FINISH: SEE NOTES	MAT'L.: SEE NOTES
PDWG,NO: 0900-1		SCALE: N/A REV.: A0	UNIT: mm PAGE: 1/1