REV.	DESCRIPTION	NAME	DATE
A	NEWS ISSUE		

NOTES:

1. MATERIAL:
   MOLDING: LCP UL94 V-0
   CONTACT:COPPER ALLOY.

   SHELL: SUS304-H, T=0.30±0.03mm
   50u″ NICKEL PLATING OVER ALL.
   SHILD:SUS304-H, T=0.12±0.03mm
2. MECHANICAL:
   INSERTION: 5~20N.
   EXTRACTION: 8~20N.
   DURABILITY: 10000 CYCLES
3. ELECTRICAL:
   CURRENT: 5A MAX FOR VBUS;
   1.25A FOR GND, 0.25A FOR OTHER.
   VOLTAGE: 20VDC MAX
   WITHSTANDING VOLTAGE: 100V AC.
   CONTACT RESISTANCE: 40mΩ MAX.
   INSULATION RESISTANCE: 100MΩ MIN.
4. ENVIRONMENTAL
   TEMPERATURE RANGE: -30° C TO +80° C

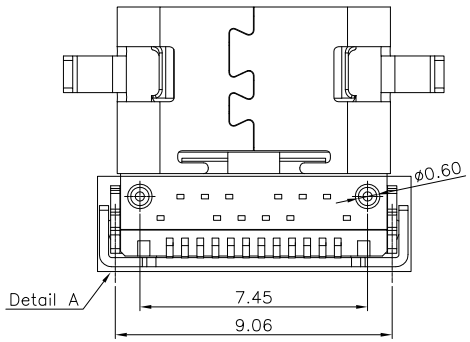

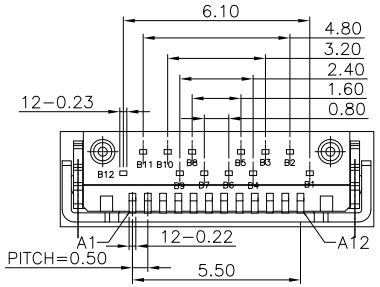

Detail A

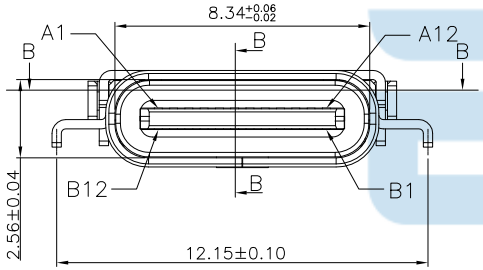

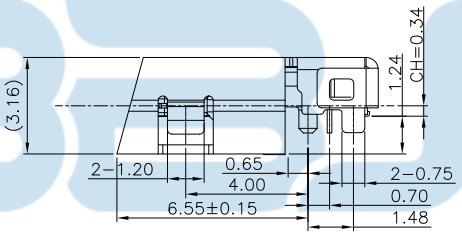

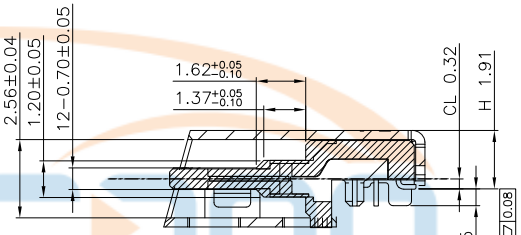

SECTION A-A
SCALE 1:1

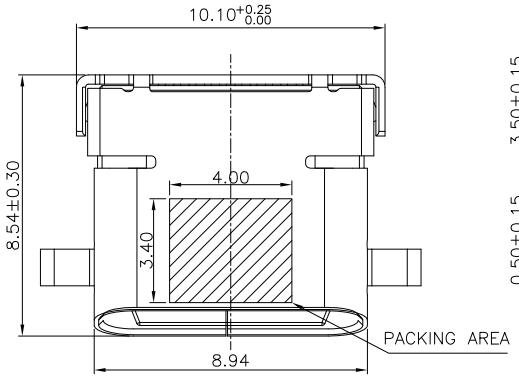

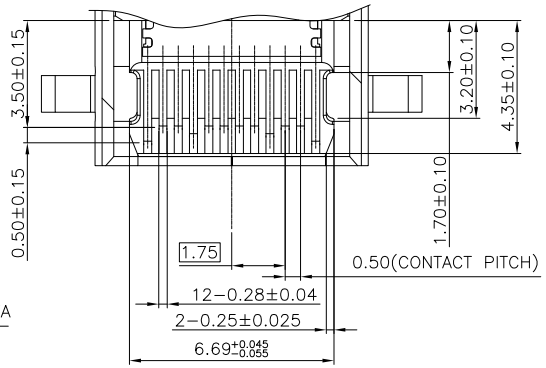

SECTION B-B
SCALE 1:1

TOLERANCE UNSPECIFIED

.	
.0	±0.35
.00	±0.25
.000	±0.15
X.°	±2.00°

CUSTOMER DRAWING

深圳市步步精科技有限公司

TITLE: TYPE-C 24P 母座 斜口 L=8.54 CH=0.34 沉板1.24 四脚插 带柱 端子 (SMT+DIP)

DRAWN/ DATE	设计	TSP	SIZE:A4	UNIT:MM.	PART.NO: 126-223-240034-T7G
CHECKED/ DATE	审核	LYX	SCALE: 1:1	PROJECTION	REV.: 版本
APPROVED/ DATE	核准	LJP	DWG. PATH	0228-1	SHEET: 页码

REV.	DESCRIPTION	NAME	DATE
A	NEWS ISSUE		

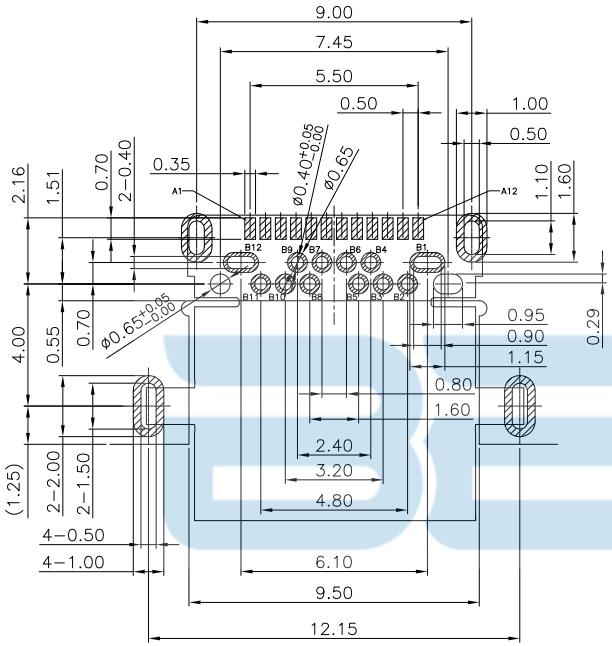

RECOMMEND P.C.B LAYOUT(COMPONENT SIDE)

TOLERANCE FOR PCB LAYOUT IS ±0.05

KEEP OUT AREA

USB TYPE-C FULL-FEATURED RECEPTACLE INTERFACE PIN ASSIGNMENTS

PIN	Signal Name	Description	PIN	Signal Name	Description
A1	GND	Ground return	B12	GND	Ground return
A2	SSTXp1	Positive half of first SuperSpeed TX differential pair	B11	SSRXp1	Positive half of first SuperSpeed RX differential pair
A3	SSTXn1	Negative half of first SuperSpeed TX differential pair	B10	SSRXn1	Negative half of first SuperSpeed RX differential pair
A4	VBUS	Bus Power	B9	VBUS	Bus Power
A5	CC1	Configuration Channel	B8	SBU2	Sideband Use (SBU)
A6	Dp1	Positive half of the USB 2.0 differential pair-Position 1	B7	Dn2	Negative half of the USB 2.0 differential pair-Position 2
A7	Dn1	Negative half of the USB 2.0 differential pair-Position 1	B6	Dp2	Positive half of the USB 2.0 differential pair-Position 2
A8	SBU1	Sideband Use(SBU)	B5	CC2	Configuraation Channel
A9	VBUS	Bus Power	B4	VBUS	Bus Power
A10	SSRXn2	Negative half of second SuperSpeed RX differential pair	B3	SSTXn2	Negative half of second SuperSpeed TX differential pair
A11	SSRXp2	Positive half of second SuperSpeed RX differential pair	B2	SSTXp2	Positive half of second SuperSpeed TX differential pair
A12	GND	Ground return	B1	GND	Ground return

TOLERANCE UNSPECIFIED

.	
.0	±0.35
.00	±0.25
.000	±0.15
X.°	±2.00°

CUSTOMER DRAWING

深圳市步步精科技有限公司

TITLE: TYPE-C 24P 母座 斜口 L=8.54 CH=0.34 沉板1.24 四脚插 带柱 端子 (SMT+DIP)

DRAWN/ DATE	设计	TSP	SIZE:A4	UNIT:MM.	PART.NO: 126-223-240034-T7G
CHECKED/ DATE	审核	LYX	SCALE: 1:1	PROJECTION	REV.: 版本
APPROVED/ DATE	核准	LJP	DWG. PATH	0228-1	SHEET: 页码

REV.	DESCRIPTION	NAME	DATE
A	NEWS ISSUE		

出料方向
PULL OUT DIRECTEON

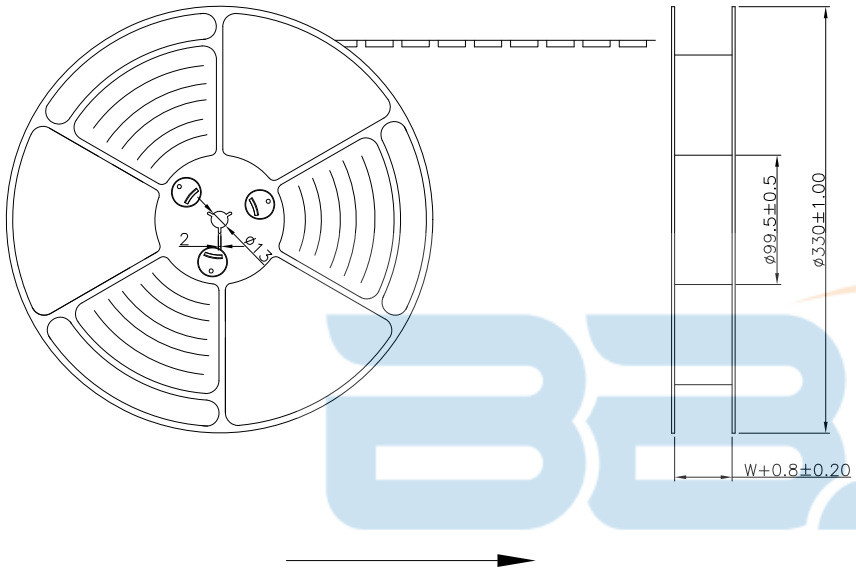

NOTES

1.帶子引導長度
LEAD TAPE LENGTH
出料方向
PULL OUT DIRECTEON

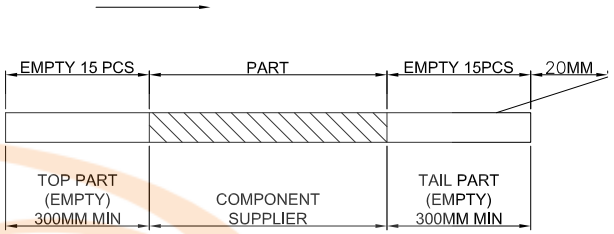

2.上帶 剝力力為：0.1~1.3N(10.2gf~130gf)
PEELING OFF FORCE OF TOP TAPE:0.1~1.3N(10.2gf~130gf)
出貨運輸過程中一定注意：
THIS REQUIREMENT SHOULD BE APPLIED AT SHIPMENT：
卷帶在運輸過程中不能散開
PEELING OFF SHOULD NOT BE ALLOWED DURING TRANSPORTATION

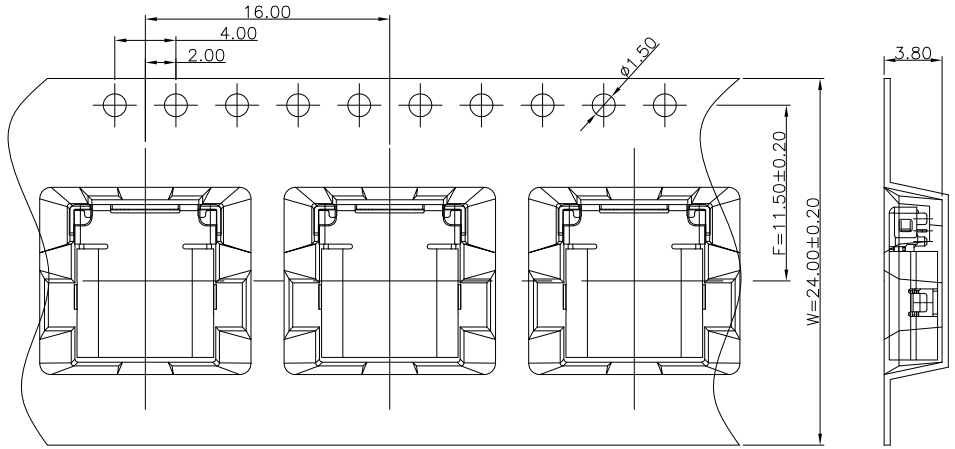

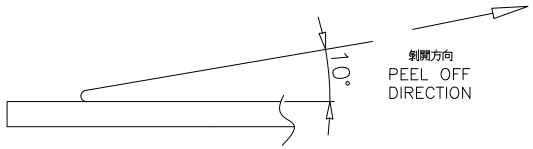

TOLERANCE UNSPECIFIED
.
.0 ±0.35
.00 ±0.25
.000 ±0.15
X.° ±2.00°
CUSTOMER DRAWING

深圳市步步精科技有限公司

TITLE: TYPE-C 24P 母座 斜口 L=8.54 CH=0.34 沉板1.24 四脚插 带柱 端子 (SMT+DIP)

DRAWN/ DATE	设计	TSP	SIZE:A4	UNIT:MM.	PART.NO: 126-223-240034-T7G
CHECKED/ DATE	审核	LYX	SCALE: 1:1	PROJECTION	REV.: 版本
APPROVED/ DATE	核准	LJP	DWG. PATH	0228-1	SHEET: 页码

REV.	DESCRIPTION	NAME	DATE
A	NEWS ISSUE		

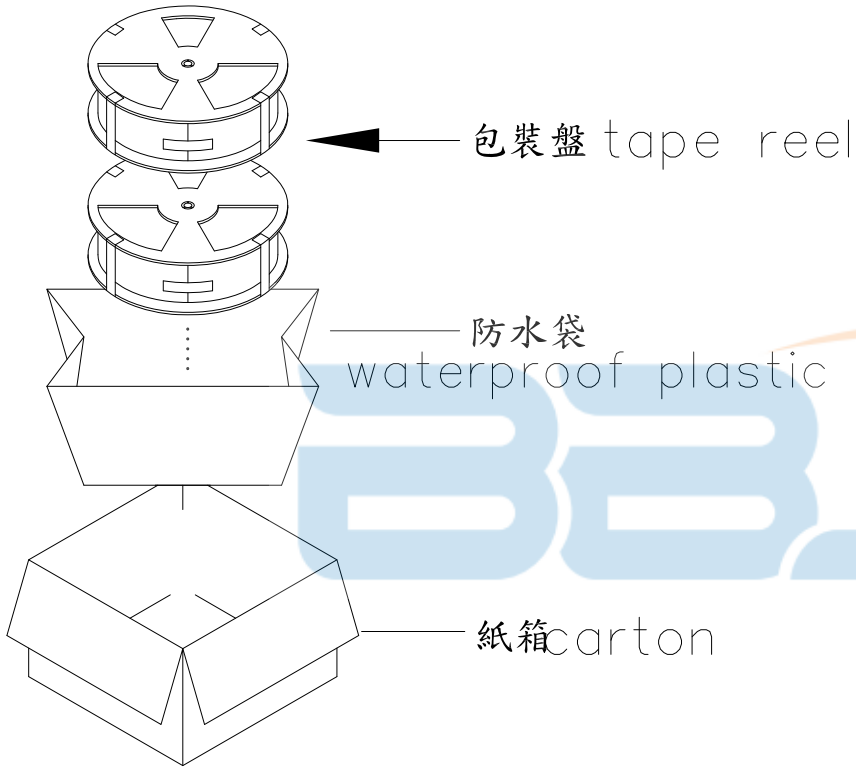

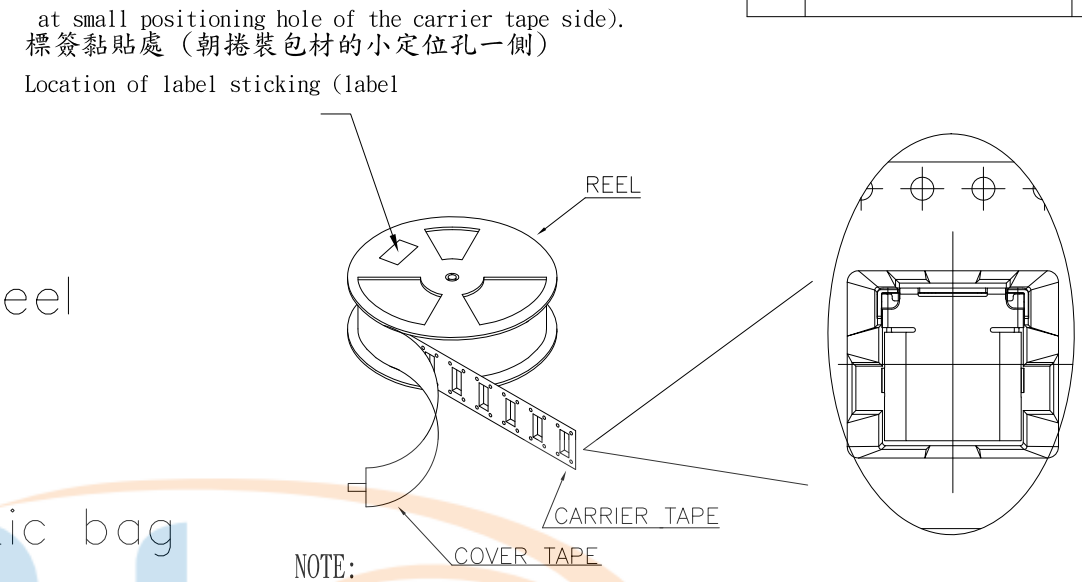

NOTE:

1. 每捲包裝數量及每箱裝箱數量如左下表格.
Packing q'ty of each reel & carton as below table shown.
2. 以上膠帶覆蓋下包裝帶經包裝機熱熔包裝
Use cover tape to cover and hot melt machine to seal up.
3. 每個紙箱放2個珍珠棉
Every carton use 2pcs EPE.
4. 將裝滿產品的卷盤放入紙箱并以膠帶封口
Put reels in the carton and use adhesive tape to seal up.

包 裝 容 量 (PACKING CAPACITY)			重 量 WEIGHT (Kg)		
PCS/REEL	REELS/CARTON	PCS/CARTON	N.W./PCS	N.W./BOX	G.W./BOX
1000	10	10000			

TOLERANCE UNSPECIFIED
.
.0 ±0.35
.00 ±0.25
.000 ±0.15
X.° ±2.00°
CUSTOMER DRAWING

深圳市步步精科技有限公司

TITLE: TYPE-C 24P 母座 斜口 L=8.54 CH=0.34 沉板1.24 四脚插 带柱 端子 (SMT+DIP)

DRAWN/ DATE	设计	TSP	SIZE:A4	UNIT:MM.	PART.NO: 126-223-240034-T7G
CHECKED/ DATE	审核	LYX	SCALE: 1:1	PROJECTION	REV.: 版本
APPROVED/ DATE	核准	LJP	DWG. PATH	0228-1	SHEET: 页码