bbJconn
Since 1987 步步精科技

REV.	ECN NO.	CONTENT	DATE	ENGINEER
A0		Initial Release	/	LHC

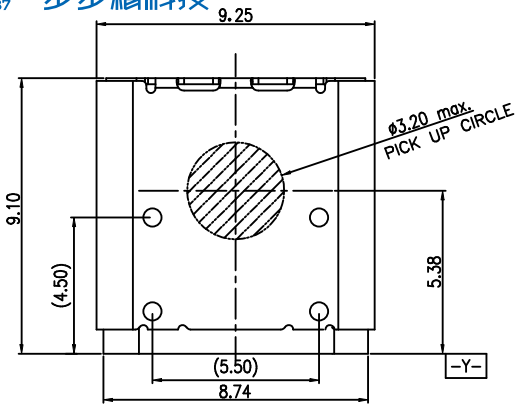

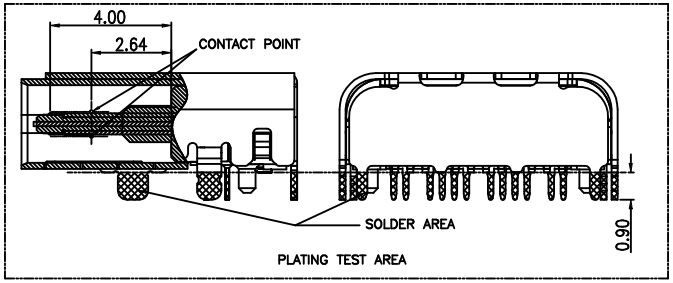

NOTES:

1. ELECTRICAL CHARACTERISTICS :
   1-1. CONTACT CURRENT RATING:
   5.0 A FOR VBUS PIN AND ITS CORRESPONDING GND PIN.
   0.25 A MIN FOR ALL OTHER CONTACTS.
   1-2. CONTACT RESISTANCE: INITIAL 40 mΩ Max.
   AFTER 50 mΩ Max.
   1-3. DIELECTRIC WITHSTANDING VOLTAGE : 100 VRMS AC MIN.
   1-4. INSULATION RESISTANCE: 100 MEGOHMS MIN.
2. MECHANICAL CHARACTERISTICS:
   2-1. CONNECTOR INSERTION FORCE: 5~20N.
   AT A MAXIMUN RATE OF 12.5MM PER SECOND.
   2-2. CONNECTOR EXTRACTION FORCE: 8~20N FORM 1000 CYCLES
   6~20N FORM 1000 to 10000 CYCLES
   2-3. DURABILITY: 10000 CYCLES.
   2-4. OPERATING TEMPERATURE: -55°C TO +85°C
3. DIMENSIONS ARE IN MILLIMETERS, BRACKETED DIMENSIONS ARE INCHES EQUIVALENTS.
4. RECOMMENED PROCESS: IR REFLOW 260°C, 10 SECONDS.
5. THE CONNECTOR IS ROHS COMPLIANT.

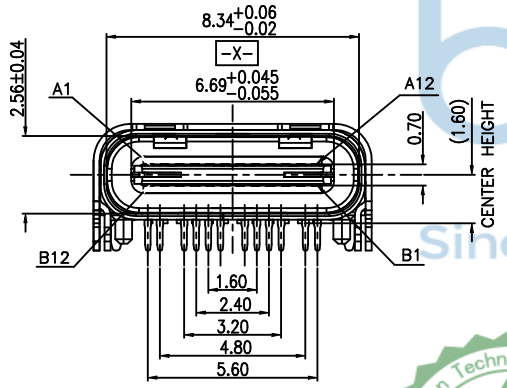

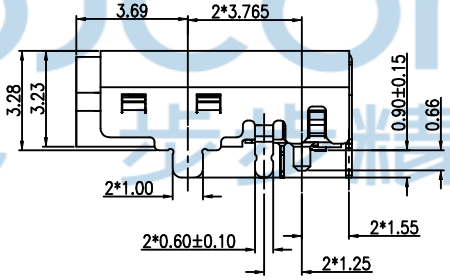

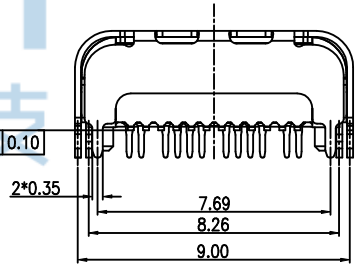

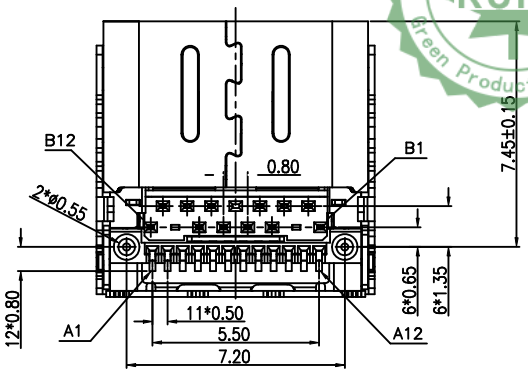

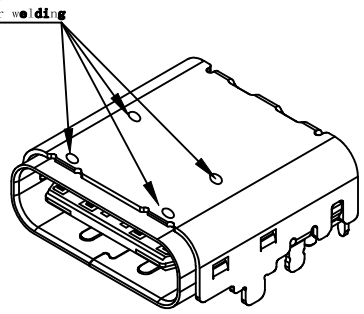

BBJconn Technology Co., Ltd
RoHS
Green Product Compliant

深圳市步步精科技有限公司
BBJconn
APPROVED
工程部
BBJconn Technology Co., Ltd

THIS DOCUMENT IS THE SOLE PROPERTY OF BBJconn Technology Co.,Ltd. Corporation AND SHOULD NOT BE USED IN WHOLE OR IN PART WITHOUT PRIOR WRITTEN PERMISSION.

深圳市步步精科技有限公司

.X: ±0.38 .XX: ±0.25 .XXX: ±0.13	X°: ±3° .X°: ±2° .XX°: ±1°	NAME: TYPE-C 24P 母座 L=9.10 CH=1.60 脚长0.9 板上六脚插 带柱 双壳 端子SMT+DIP 30U编带
APPD.	JM_Zheng	PJ. NO.: 126-223-240002-J6G
CHKD.	LYX	SIZE: A4 DRW NO.:
DR.	LHC	FINISH: SEE NOTES MAT'L.: SEE NOTES
PDWG,NO: 0469-2		SCALE: N/A REV.: A0 UNIT: mm PAGE: 1/4

REV.	ECN NO.	CONTENT	DATE	ENGINEER
A0		Initial Release	/	LHC

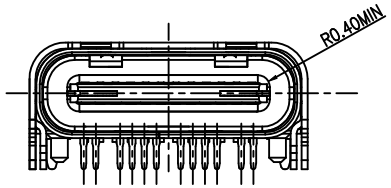

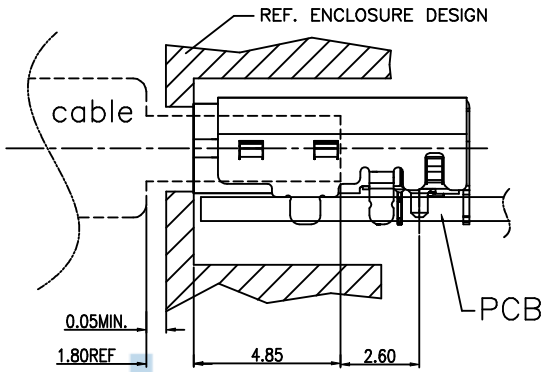

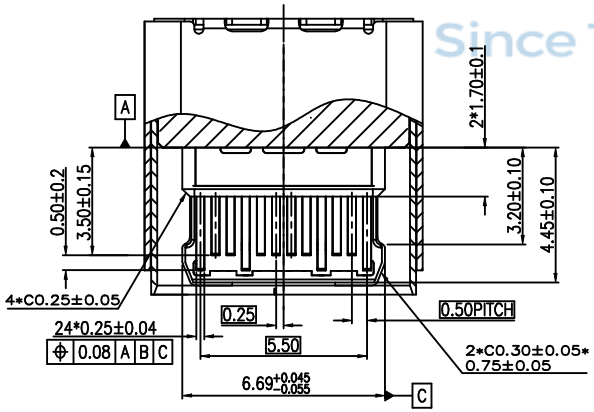

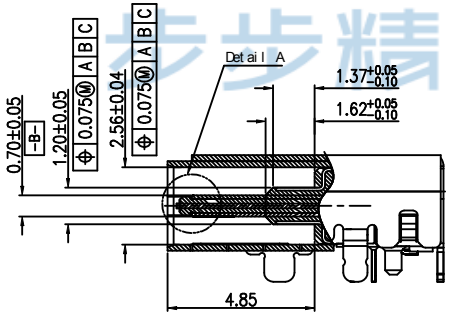

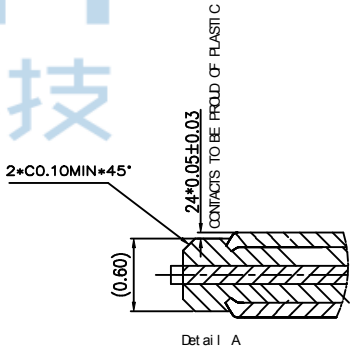

bbJconn Since 1987 步步精科技

THIS DOCUMENT IS THE SOLE PROPERTY OF BBJconn Technology Co.,Ltd. Corporation AND SHOULD NOT BE USED IN WHOLE OR IN PART WITHOUT PRIOR WRITTEN PERMISSION.	深圳市步步精科技有限公司		
	.X: ±0.38 .XX: ±0.25 .XXX: ±0.13	X°: ±3° .X°: ±2° .XX°: ±1°	NAME: TYPE-C 24P 母座 L=9.10 CH=1.60 脚长0.9 板上六脚插 带柱 双壳 端子SMT+DIP 30U编带
	APPD.	JM_Zheng	PJ. NO.: 126-223-240002-J6G
	CHKD.	LYX	SIZE: A4 DRW NO.:
			FINISH: SEE NOTES MAT'L.: SEE NOTES
PDWG,NO: 0469-2	DR.	LHC	SCALE: N/A REV.: A0 UNIT: mm PAGE: 2/4

bbJconn Since 1987 步步精科技

REV.	ECN NO.	CONTENT	DATE	ENGINEER
A0		Initial Release	/	LHC

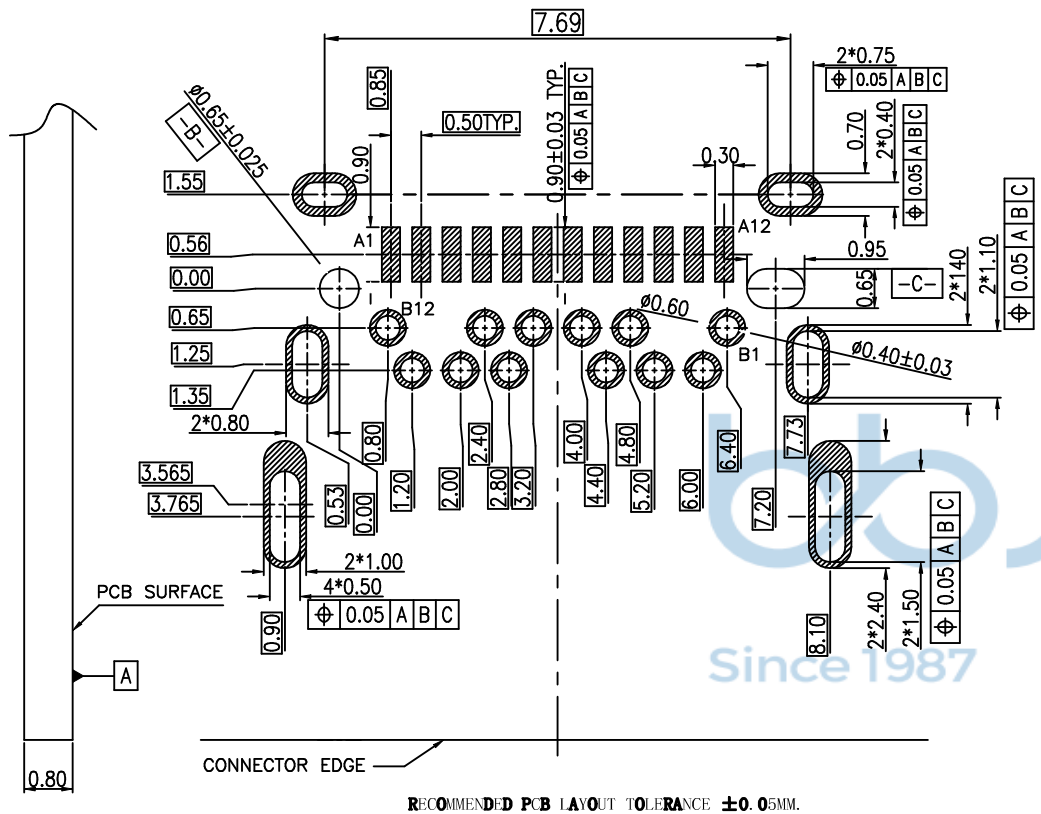

RECOMMENDED PCB LAYOUT TOLERANCE ±0.05MM.

PIN	SIGNAL NAME	PIN	SIGNAL N
A1	GND	B12	GND
A2	SSTXp1	B11	SSRXp1
A3	SSTXn1	B10	SSRXn1
A4	VBUS	B9	VBUS
A5	CC1	B8	SBU2
A6	Dp1	B7	Dn2
A7	Dn1	B6	Dp2
A8	SBU1	B5	CC2
A9	VBUS	B4	VBUS
A10	SSRXn2	B3	SSTXn2
A11	SSRXp2	B2	SSTXp2
A12	GND	B1	GND

NO.	PART NAME.	QTY.	MATERIAL	FINISH
⑦	TOP CONTACT	1 SET	COPPER ALLOY	50u" MIN. NI UNDER PLATING. 80u" MIN. MATTE TIN PLATING ON SOLDER AREA. 30u" PLATING ON CONTACT AREA.(SEE PART MUM)
⑥	BOTTOM CONTACT	1 SET	COPPER ALLOY	
⑤	EMI SPRING	1 PCS	STAINLESS STEEL	NO PLATING
④	MID PLATE	1 PCS	STAINLESS STEEL	NO PLATING
③	HOUSING	1 PCS	THERMOPLASTIC.	UL94V-0
②	INNER SHELL	1 PCS	STAINLESS STEEL	50u" MIN. NI PLATING ON SOLDER AREA
①	TOP SHELL	1 PCS	STAINLESS STEEL	50u" MIN. SOLDERABLE NI PLATING ON SOLDER AREA

THIS DOCUMENT IS THE SOLE PROPERTY OF BBJconn Technology Co.,Ltd. Corporation AND SHOULD NOT BE USED IN WHOLE OR IN PART WITHOUT PRIOR WRITTEN PERMISSION.

深圳市步步精科技有限公司

.X: ±0.38 X°: ±3°
.XX: ±0.25 .X°: ±2°
.XXX: ±0.13 .XX°: ±1°

NAME: TYPE-C 24P 母座 L=9.10 CH=1.60 脚长0.9 板上六脚插 带柱 双壳 端子SMT+DIP 30U编带

APPD.	JM_Zheng	PJ. NO.:	126-223-240002-J6G
CHKD.	LYX	SIZE: A4	DRW NO.:
DR.	LHC	FINISH: SEE NOTES	MAT'L.: SEE NOTES
PDWG,NO: 0469-2		SCALE: N/A REV.: A0	UNIT: mm PAGE: 3/4

BBJconn Technology Co., Ltd RoHS Green Product Compliant

深圳市步步精科技有限公司 BBJconn Technology Co., Ltd APPROVED 工程部

REV.	ECN NO.	CONTENT	DATE	ENGINEER
A0		Initial Release	/	LHC

NOTES :
1. MATERIAL :
   COVER TAPE : P.S T=0.05mm
   CARRIER TAPE : P.S T=0.40mm
   CARTON: CORRUGATED FIBER
2. DIMENSION :
   REEL : SEE DRAWING
   SHIPPING BOX: 350X350X300mm
3. QUANTITY : SEE TABLE
4. PEELING RESISTANCE : 10gf~130gf (for 12~56mm)
5. PEELING SPEED : 300mm/MINUTES

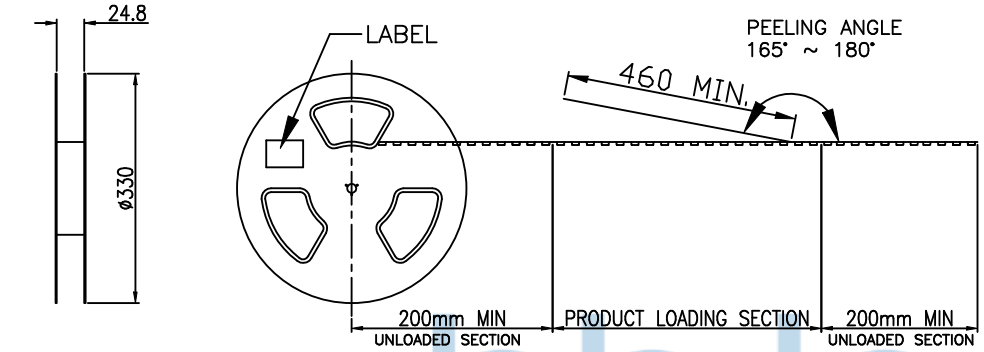

PULL OUT DIRECTION

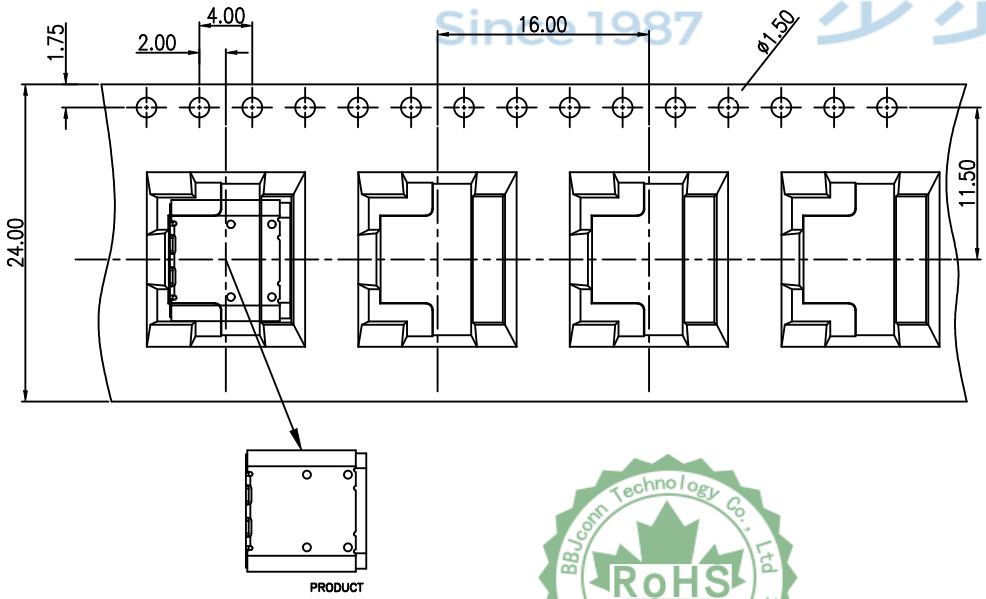

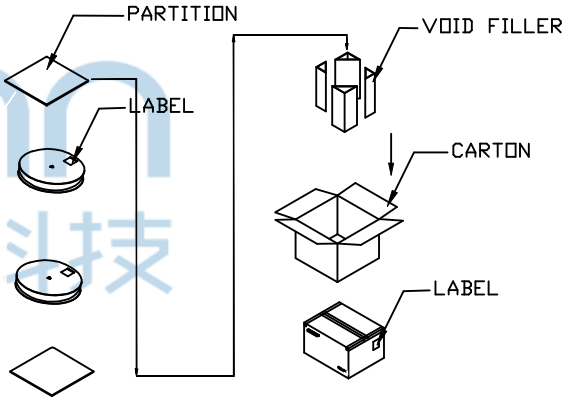

800	9	7200
PCS/REEL	REEL/BOX	TOTAL Q'TY

THIS DOCUMENT IS THE SOLE PROPERTY OF BBJconn Technology Co.,Ltd. Corporation AND SHOULD NOT BE USED IN WHOLE OR IN PART WITHOUT PRIOR WRITTEN PERMISSION.

深圳市步步精科技有限公司

.X: ±0.38	X°: ±3°	NAME:	TYPE-C 24P 母座 L=9.10 CH=1.60 脚长0.9 板上六脚插 带柱 双壳 端子SMT+DIP 30U编带
.XX: ±0.25	.X°: ±2°		
.XXX: ±0.13	.XX°: ±1°		
APPD.	JM_Zheng	PJ. NO.:	126-223-240002-J6G
CHKD.	LYX	SIZE: A4	DRW NO.:
		FINISH: SEE NOTES	MAT'L.: SEE NOTES
PDWG,NO: 0469-2	DR. LHC	SCALE: N/A REV.: A0	UNIT: mm PAGE: 4/4