REV.	ECN NO	CONTENT	DATE	ENGINEER
A0		Initial release	/	TSP

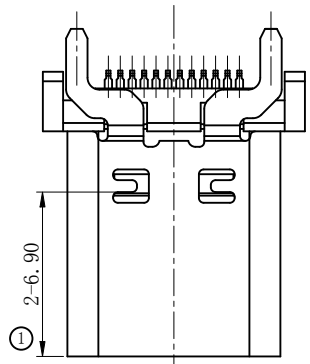

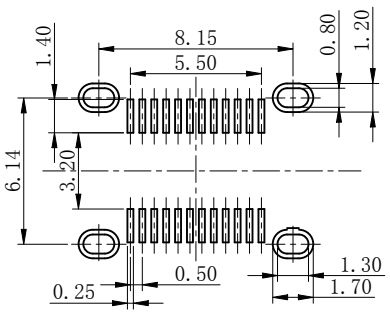

RECOMMENDED PCB LAYOUT(TOP VIEW)

DEFAULT TOLERANCE:±0.05

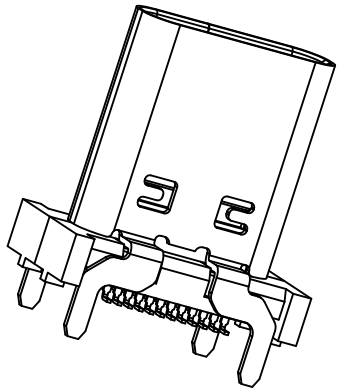

NOTE:
1.MATERIAL:
1.1 INSULATOR: HIGH TEMPERATURE PLASTIC UL 94 V-0;
1.2 CONTACT: COPPER ALLOY
1.3 SHELL:STAINLESS STEEL
2.ELECTRICAL CHARACTERISTICS;
2.1 CONTACT RESISTANCE: 40mΩ Max FOR INITIAL. 10mΩ CHANGE AFTER TEST. MEASURE AT 20mV, 100mA.
2.2 CONTACT CURRENT RATING: 5A FOR VBUS PIN; 1.25A FOR VCONN PIN.
2.3 DIELECTRIC WITHSTANDING VOLTAGE: 100V AC R.M.S.
2.4 INSULATION RESISTANCE 100MΩ Min
2.5 OPERATING TEMPERATURE: -25°C ~ 85°C
3 MECHANICAL CHARACTERISTICS:
3.1 MATING FORCE: 5~20 N.
3.2 UNMATED FORCE: 8~20N AFTER TEST
3.3 DURABILITY: 10,000 CYCLES
4.PLATING
4.1 TERMINAL CONTACT:GOLD PLATING 1u" ALL OVER 50u" Min NICKEL AND 80u"Min Tin ALL OVER 50u" Min NICKEL ON SOLDER AREA
4.2 SHELL: 30u" Min. NICKEL ALL OVER,

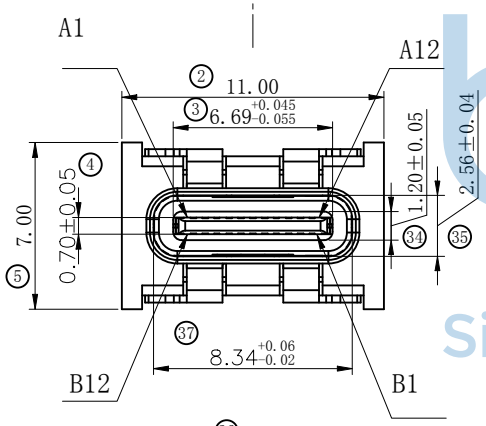

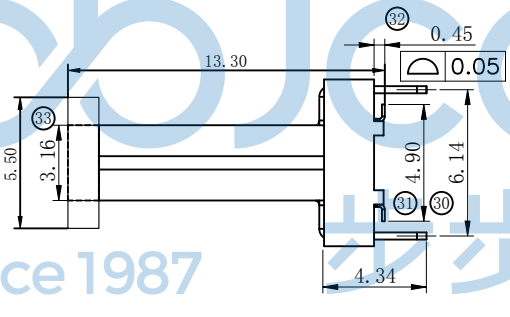

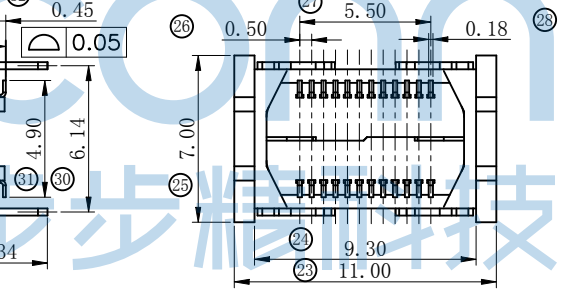

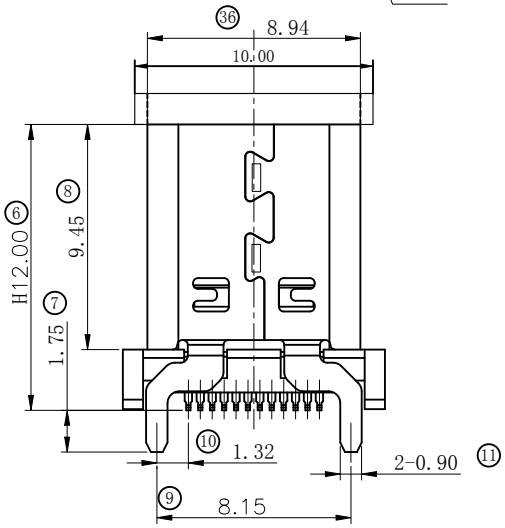

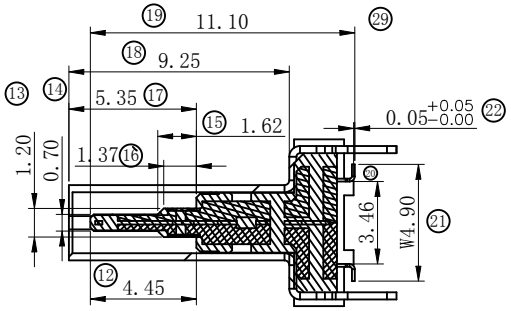

	A		B
1	GND	12	GND
2	TX1+	11	RX1+
3	TX1-	10	RX1-
4	VBUS	9	VBUS
5	CC1	8	SBU2
6	D+	7	D-
7	D-	6	D+
8	SBU1	5	CC2
9	VBUS	4	VBUS
10	RX2-	3	TX2-
11	RX2+	2	TX2+
12	GND	1	GND

THIS DOCUMENT IS THE SOLE PROPERTY OF BBJconn Technology Co.,Ltd. Corporation AND SHOULD NOT BE USED IN WHOLE OR IN PART WITHOUT PRIOR WRITTEN PERMISSION.

深圳市步步精科技有限公司

.X: ±0.38 X°: ±3°
.XX: ±0.25 .X°: ±2°
.XXX: ±0.13 .XX°: ±1°

NAME: TYPE-C 24P 母座 直立式 四脚插 端子SMT 外壳脚长1.75 H=12.0 编带

APPD.	JM_Zheng	PJ. NO.: 126-224-240002-J6G	
CHKD.	LYX	SIZE: A4	DRW NO.:
		FINISH: SEE NOTES	MAT'L.: SEE NOTES
PDWG,NO: 0469-2	DR. TSP	SCALE: N/A REV.: A0	UNIT: mm PAGE: 1/2

bbJconn Since 1987 步步精科技

REV.	ECN NO	CONTENT	DATE	ENGINEER
A0		Initial release	/	TSP

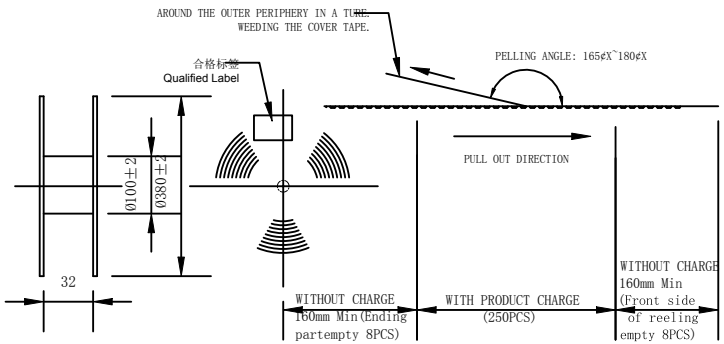

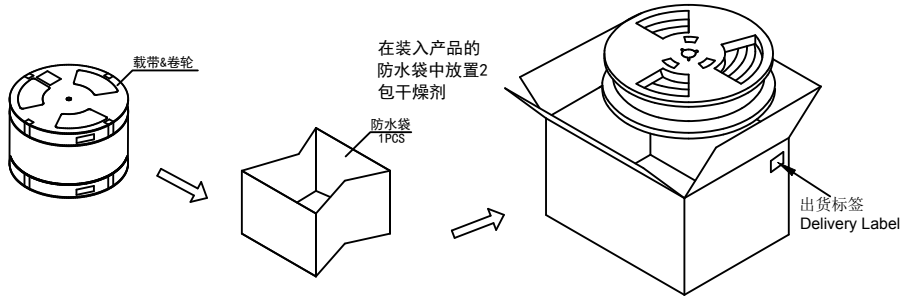

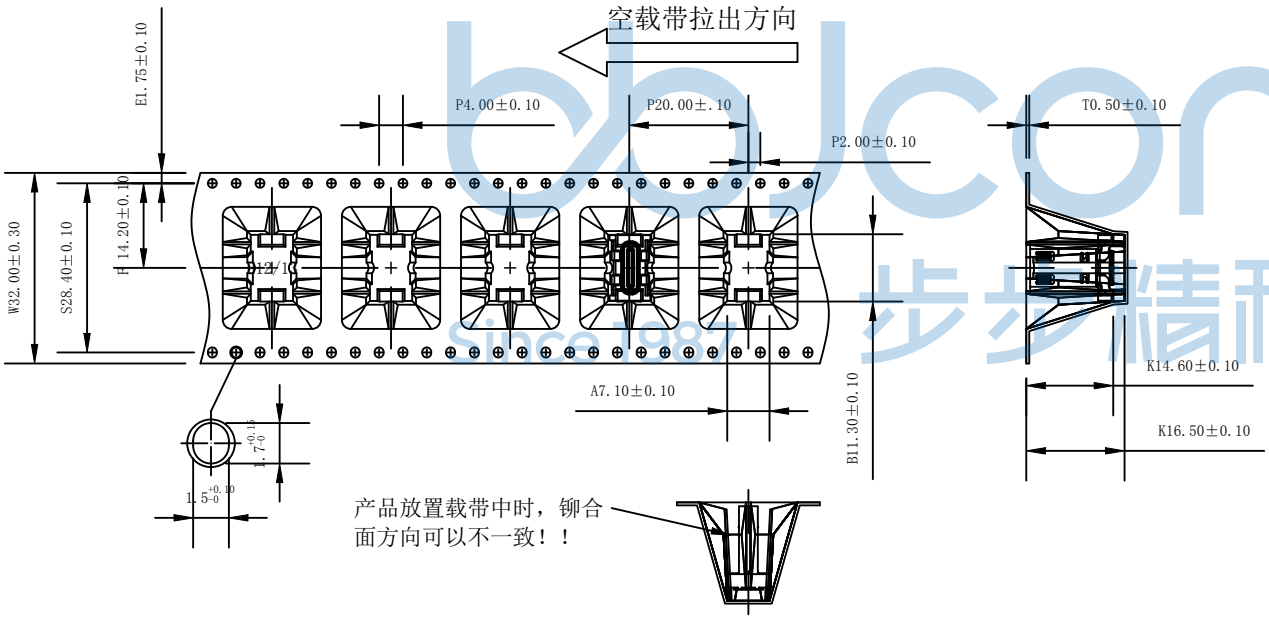

包装规范说明:

1. 自动机包装前先调整前段空出10格,中间装250PCS产品，尾端需空出10格;
2. 按照图示方向将成品一一放入REEL包装盘内,依同一方向放入;
3. 一个REEL包装盘放置250个成品，装满成品的REEL盘外圈需装上保护带，四周贴上美纹胶，盘面贴一张内标签;
4. 将每盘产品依次放入箱内,一箱装10盘(250*10=2500PCS). 四周用三角板固定，最后用透明胶纸将纸箱四周封实，箱外贴上外标签;
5. 若有未装满之零数箱，必须以缓行材料塞满，数量比较少时可单盘包装出货;
6. 剥离力0.1-1.3KG(300mm/min),剥离角度:165°~180°;
7. 适用产品:TYPE C 24PIN直立式H12/13mm

NO.	包材名称 Items	用量 Usage	适用类别 Series	备 注 / Remark
①	纸箱 Carton	1		390*390*400mm
②	PE Bag	1		800*700*0.05mm
③	carrier	8		W=32mm PET 透明L=5.32M
④	tape cover	/		W=25.5MM,300m/r透明色
⑤	塑胶卷轴 Plastic Reel	8		Ø380mm,W=37mm
⑥	干燥剂 Desiccant	4		———
⑦	环保标签 Rohs Label	9		
⑧	合格标签 Qualified Label	8		70*60mm
⑨	出货标签 Delivery Label	1		70*60mm

THIS DOCUMENT IS THE SOLE PROPERTY OF BBJconn Technology Co.,Ltd. Corporation AND SHOULD NOT BE USED IN WHOLE OR IN PART WITHOUT PRIOR WRITTEN PERMISSION.

深圳市步步精科技有限公司

.X: ±0.38 .XX: ±0.25 .XXX: ±0.13	X°: ±3° X.°: ±2° X.X°: ±1°	NAME: TYPE-C 24P 母座 直立式 四脚插 端子SMT 外壳脚长1.75 H=12.0 编带
APPD.	JM_Zheng	PJ. NO.: 126-224-240002-J6G
CHKD.	LYX	SIZE: A4 DRW NO.:
DR.	TSP	FINISH: SEE NOTES MAT'L.: SEE NOTES
PDWG,NO: 0469-2		SCALE: N/A REV.: A0 UNIT: mm PAGE: 2/2