bbJconn Since 1987 步步精科技

REV.	ECN NO	CONTENT	DATE	ENGINEER
A0		Initial release	/	TSP

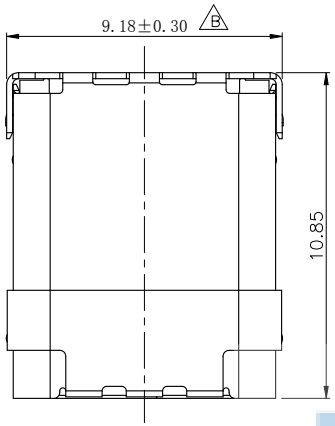

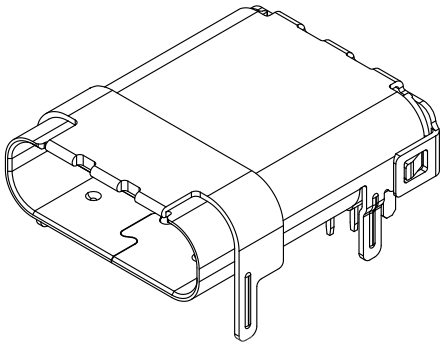

NOTE:
1. MATERIAL:
   1.1 INSULATOR: HIGH TEMPERATURE PLASTIC UL 94 V-0;
   1.2 CONTACT: COPPER ALLOY
   1.3 SHELL:STAINLESS STEEL
2. ELECTRICAL CHARACTERISTICS;
   2.1 CONTACT RESISTANCE: 40mΩ Max FOR INITIAL. 10mΩ CHANGE AFTER TEST. MEASURE AT 20mV, 100mA.
   2.2 CONTACT CURRENT RATING: 3A FOR VBUS PIN; 1.25A FOR VCONN PIN.
   2.3 DIELECTRIC WITHSTANDING VOLTAGE: 100V AC R.M.S.
   2.4 INSULATION RESISTANCE 100MΩ Min
   2.5 OPERATING TEMPERATURE: -40° C ~ 85° C
3 MECHANICAL CHARACTERISTICS:
   3.1 MATING FORCE: 5~20 N.
   3.2 UNMATED FORCE: 6~20N AFTER TEST
   3.3 DURABILITY: 10,000 CYCLES
4. PLATING
   4.1 TERMINAL CONTACT: GOLD PLATING ALL OVER 50u″ NICKEL AND 80u″ Tin ALL OVER 50u″ NICKEL ON SOLDER AREA
   4.2 SHELL: 50u″ NICKEL ALL OVER,

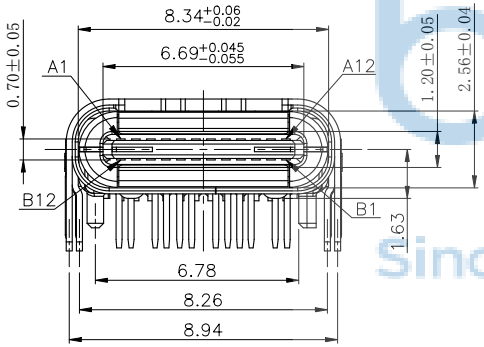

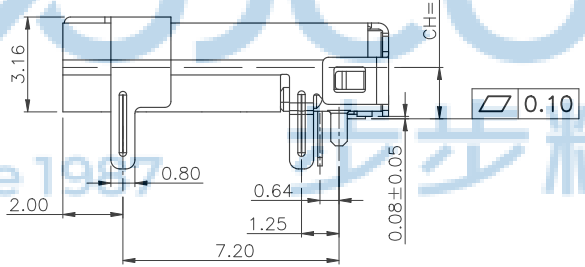

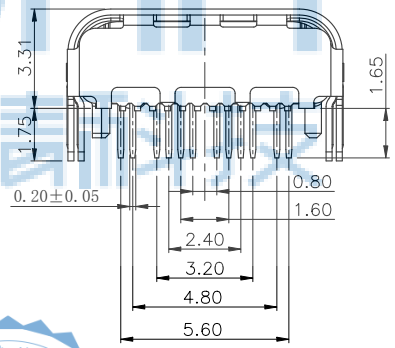

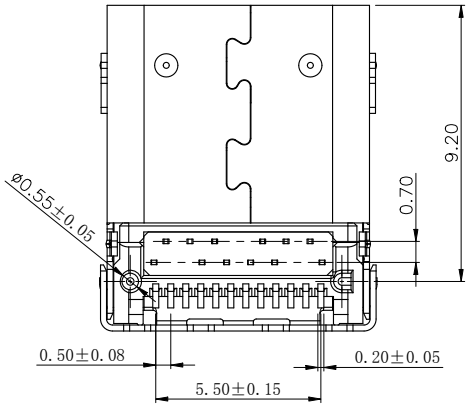

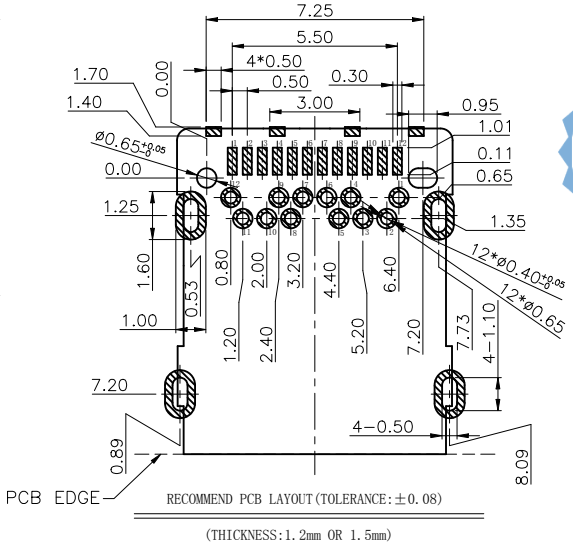

PIN	SIGNAL NAME	PIN	SIGNAL NAME
A1	GND	B12	GND
A2	TX1+	B11	RX1+
A3	TX1−	B10	RX1−
A4	VBUS	B9	VBUS
A5	CC1	B8	SBU2
A6	D+	B7	D−
A7	D−	B6	D+
A8	SBU1	B5	CC2
A9	VBUS	B4	VBUS
A10	RX2−	B3	TX2−
A11	RX2+	B2	TX2+
A12	GND	B1	GND

THIS DOCUMENT IS THE SOLE PROPERTY OF BBJconn Technology Co.,Ltd. CorporatioAND SHOULD NOT BE USED IN WHOLE OR IN PART WITHOUT PRIOR WRITTEN PERMISSION

深圳市步步精科技有限公司

.X: ±0.38 X°: ±3°
.XX: ±0.25 .X°: ±2°
.XXX: ±0.13 .XX°: ±1°

APPD.	JM_Zheng	
CHKD.	LYX	
DR.	TSP	
PDWG,NO:	0299-2	

NAME: TYPE-C 24P 母座 SMT+DIP 排距0.70 板上四脚插 带柱 L=10.85 CH=1.71 编带

PJ. NO.: UC.01.52-1F-0003
SIZE: A4 DRW NO.:
FINISH: SEE NOTES MAT'L.: SEE NOTES
SCALE: N/A REV.: A0 UNIT: mm PAGE: 1/2

REV.	ECN NO	CONTENT	DATE	ENGINEER
A0		Initial release	/	TSP

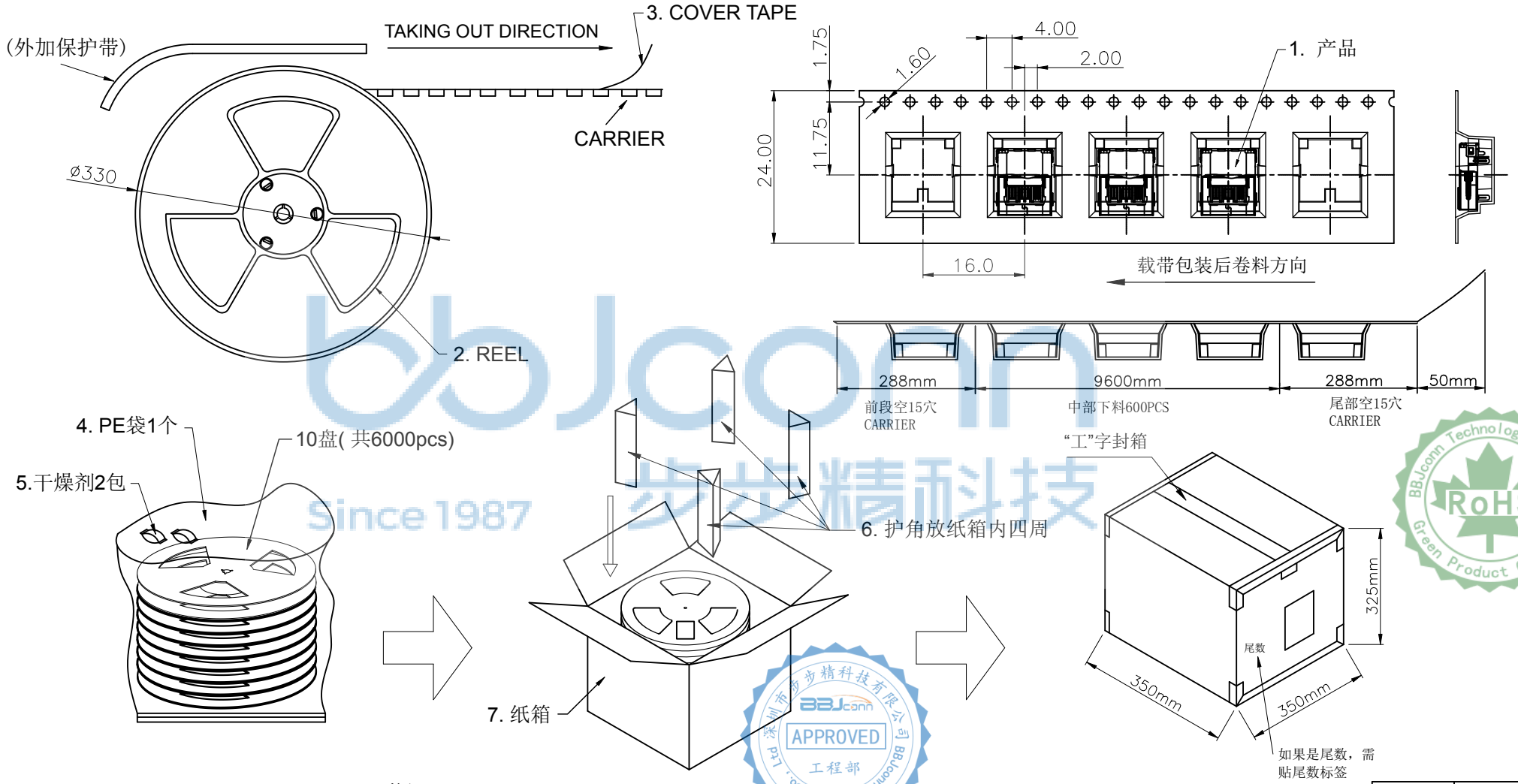

包装数量	净重	毛重
6000Pcs/箱	4.08Kg	8.35Kg

序号	品名	规格(mm)	用量(PCS)
7	纸箱	双坑K=K 350*350*325mm	1PCS
6	三角柱	30.5*29cm	4PCS
5	干燥剂	————	2PCS
4	PE袋	71*79.5cm	1PCS
3	COVER TAPE	21.0mm (自粘带)	若干
2	REEL	24.0mm (黑色载带)	10R
1	产品	————	6K

Notes:

1.每卷前后各空15PCS.尾部用美纹胶纸封住，
2.将产品放入载带内，共放600PCS,放满盘后，
再卷一圈保护带,保护带最后重叠约50mm，
用美纹胶纸将其封住
3.每10卷盘装入一个防水袋，再放入2包干燥剂,
然后放入1个外箱内；纸箱内四周放护角;
4.在搬运过程中要轻拿轻放.
5.在运输中不可堆放过多,不可有重压现象.
6.跌落测试条件:
成品箱子从1.5米高自由落体:(三棱六面一角)检验项目:
1.产品不可跑出下带凹槽.
2.产品不可有摔伤,变形.
3.外箱及内包装材料不可严重破损.

THIS DOCUMENT IS THE SOLE PROPERTY OF BBJconn Technology Co.,Ltd. CorporatioAND SHOULD NOT BE USED IN WHOLE OR IN PART WITHOUT PRIOR WRITTEN PERMISSION

PDWG,NO: 0299-2

深圳市步步精科技有限公司

.X: ±0.38 X°: ±3°
.XX: ±0.25 .X°: ±2°
.XXX: ±0.13 .XX°: ±1°

APPD. JM_Zheng
CHKD. LYX
DR. TSP

NAME: TYPE-C 24P 母座 SMT+DIP 排距0.70 板上四脚插 带柱 L=10.85 CH=1.71 编带

PJ. NO.: UC.01.52-1F-0003
SIZE: A4 DRW NO.:
FINISH: SEE NOTES MAT'L.: SEE NOTES
SCALE: N/A REV.: A0 UNIT: mm PAGE: 2/2