REV.	DESCRIPTION	NAME	DATE
A	NEWS ISSUE		

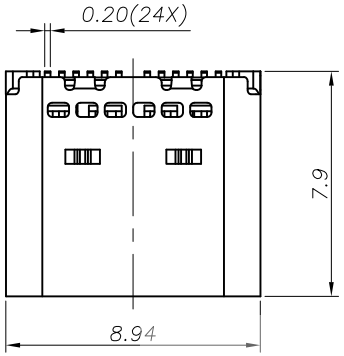

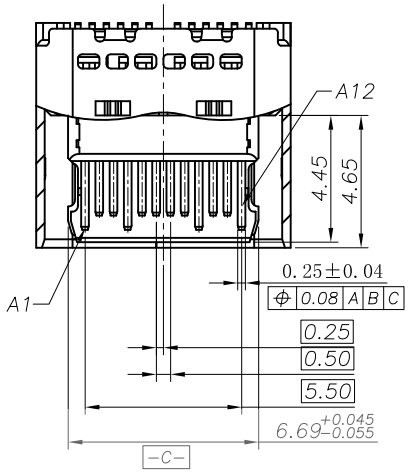

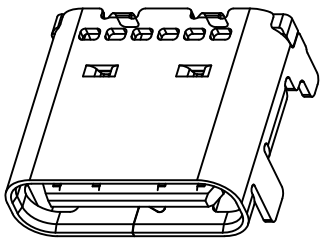

SECTION:D-D
SCALE 1:1

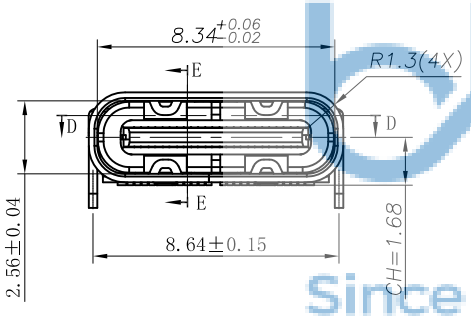

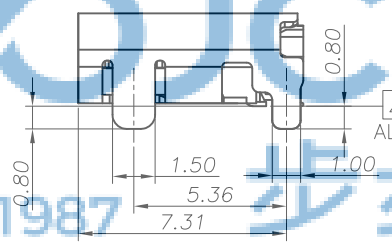

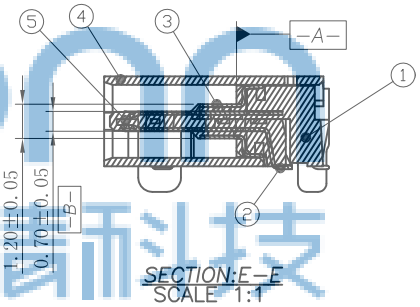

SECTION:E-E
SCALE 1:1

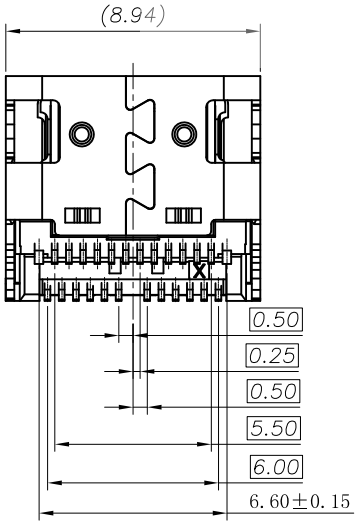

NOTE:

1. MATERIAL SPECIFICATION:
   1. HOUSING:HIGH TEMPERATURE RESISTANT PLASTIC,PA9T BLACK UL94 V-0.
   2. CONTACTS: COPPER ALLOY C1815
   3. EMI PLATE: STAINLESS STEEL
   4. FRONT SHELL: STAINLESS STEEL
   5. MID PLATE: STAINLESS STEEL
2. PLATING SPECIFICATION:
   2-1. CONTACTS:
   Ni 50u" MIN. UNDER PLATED OVER ALL.
   Au PLATED ON THE FUNCTIONAL AREA OF CONTACT.
   (GOLD PLATING THICKNESS FOLLOW Au 30u)
   PLATING SPECIFICATIONS OF THE SOLDER AREA FOLLOW
   2-2. FRONT SHELL:
   Ni 30u" MIN. UNDER PLATED OVER ALL.
   2-3. MID PLATE:
   Ni 30u" MIN. UNDER PLATED OVER ALL.
   Sn 80u"MIN. PLATED OVER ALL
   2-4. EMI PLATE:
   CLEAR ONLY
3. MECHANICAL PERFORMANCE,
   3-1. INSERTION FORCE: 0.5~2.0kgf.
   3-2. REMOVAL FORCE: 0.8kgf~2.0kgf.
   3-3. DURABILITY: 10000 CYCLES.
4. ELECTRICAL PERFORMANCE,
   4-1. CURRENT RATING:5.0A
   VOLTAGE RATING:5.0V
   4-2. LLCR:
   VBUS & GND PINS AND OTHER PINS: 40mΩ/PIN MAX.
   LLCR MAX. CHANGE OF ALL PINS: 10mΩ.
   4-3. INSULATION RESISTANCE: 100MΩ MIN
   4-4. DIELECTRIC WITHSTAND VOLTAGE,AC 100V FOR 1 MINUTE.
5. ENVIRONMENTAL PERFORMANCE:
   OPERATING TEMPERATURE: -25° C~+85° C.
6. IR REFLOW:
   THE PEAK TEMPERATURE ON THE BOARD SHALL
   BE MAINTAINED FOR 10 SECONDS AT 260° C.

TOLERANCE UNSPECIFIED

.	
.0	±0.35
.00	±0.25
.000	±0.15
X.°	±2.00°

CUSTOMER DRAWING

深圳市步步精科技有限公司

TITLE: TYPE-C 24P 母座 L=7.90 CH=1.68 板上四脚插 端子双排SMT 镀金30u 莫仕款 缺P

DRAWN/ DATE	设计	TSP	SIZE:A4	UNIT:MM.	PART.NO: UC.01.52-12-0016
CHECKED/ DATE	审核	LYX	SCALE: 1:1	PROJECTION	REV.: 版本
APPROVED/ DATE	核准	LJP	DWG. PATH	0049-1	SHEET: 页码

REV.	DESCRIPTION	NAME	DATE
A	NEWS ISSUE		

bbJconn Since 1987 步步精科技

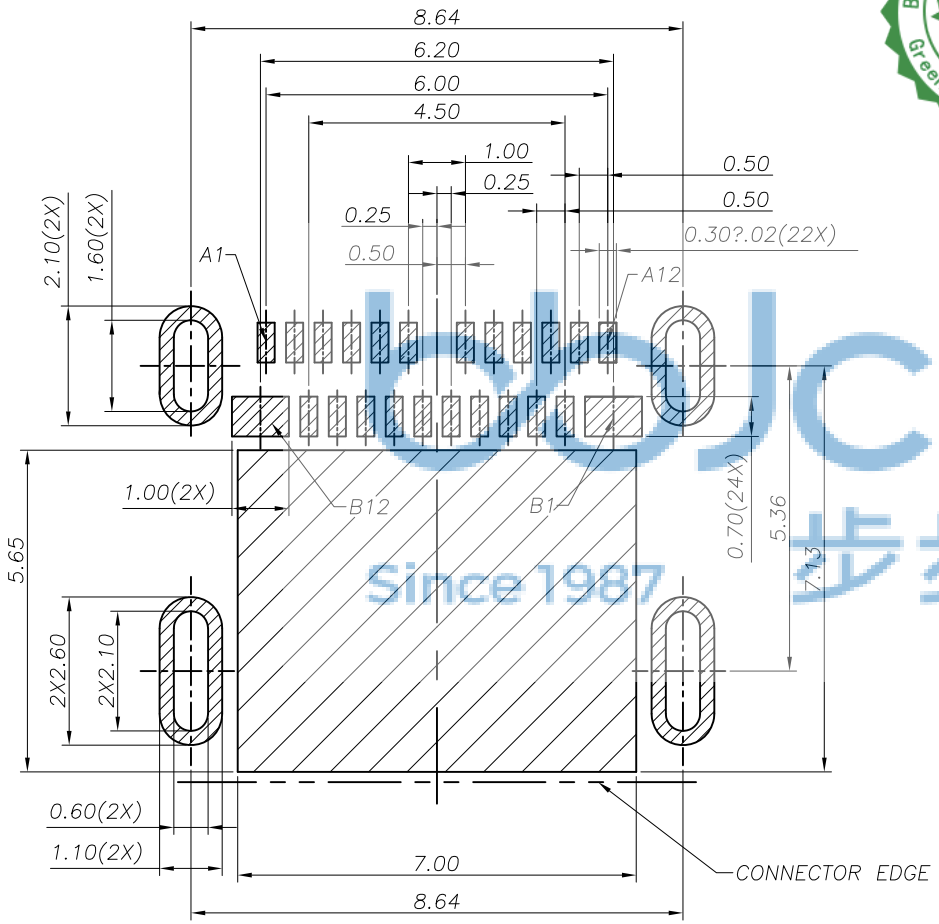

RECOMMENDED PCB LAYOUT(TOP VIEW)

THICKNESS 0.60MM;DEFAULT TOLERANCE:?.05

USB TYPE-C PIN ASSIGNMENTS

PIN NUMBER	SIGNAL NAME	PIN NUMBER	SIGNAL NAME
A1	GND	B12	GND
A2	TXp1	B11	RXp1
A3	TXn1	B10	RXn1
A4	VBUS	B9	VBUS
A5	CC1	B8	SBU2
A6	Dp1	B7	Dn2
A7	Dn1	B6	Dp2
A8	SBU1	B5	CC2
A9	VBUS	B4	VBUS
A10	RXn2	B3	TXn2
A11	RXp2	B2	TXp2
A12	GND	B1	GND

TOLERANCE UNSPECIFIED
.
.0 ±0.35
.00 ±0.25
.000 ±0.15
X.° ±2.00°
CUSTOMER DRAWING

深圳市步步精科技有限公司

TITLE: TYPE-C 24P 母座 L=7.90 CH=1.68 板上四脚插 端子双排SMT 镀金30u 莫仕款 缺P

DRAWN/ DATE	设计	TSP	SIZE:A4	UNIT:MM.	PART.NO: UC.01.52-12-0016
CHECKED/ DATE	审核	LYX	SCALE: 1:1	PROJECTION	REV.: 版本
APPROVED/ DATE	核准	LJP	DWG. PATH	0049-1	SHEET: 页码

REV.	DESCRIPTION	NAME	DATE
A	NEWS ISSUE		

bbJconn 步步精科技 Since 1987

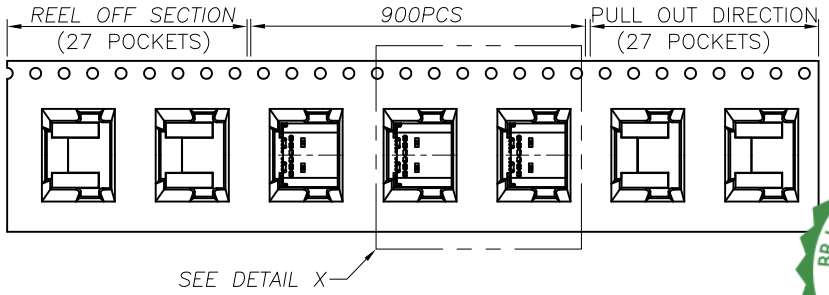

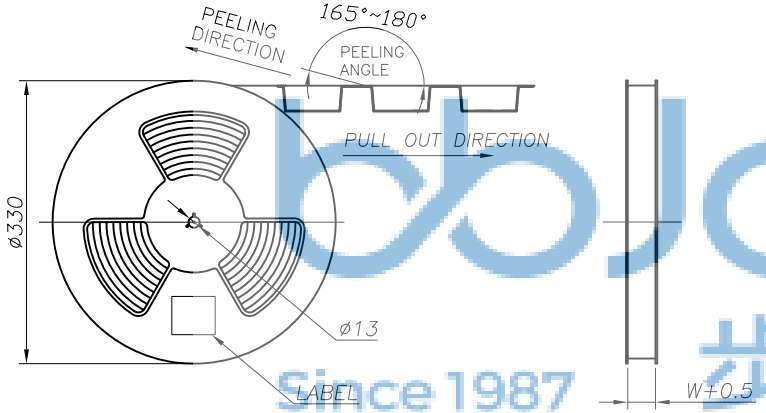

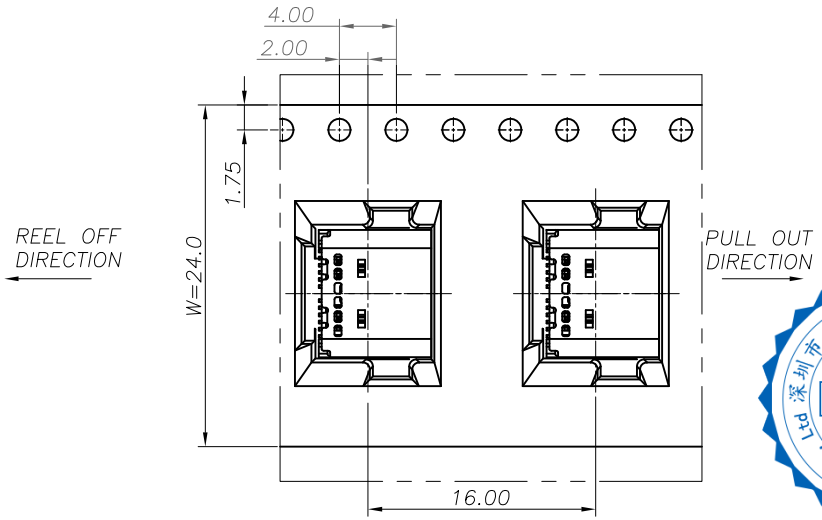

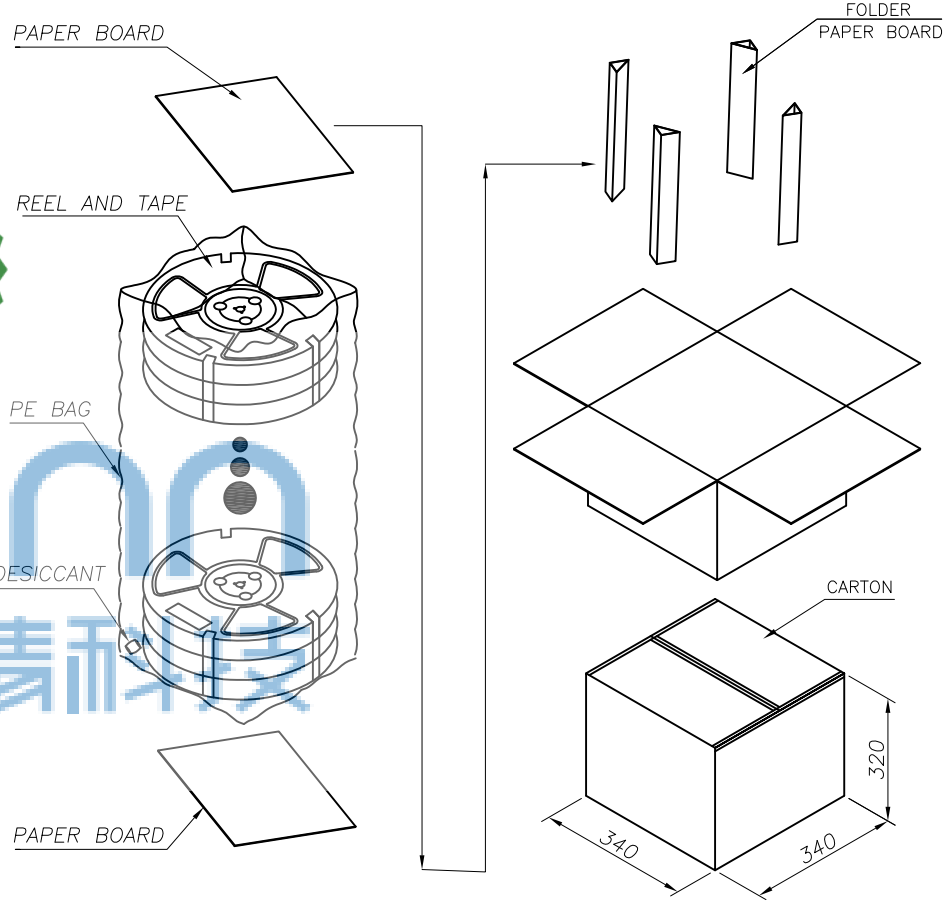

BBJconn Technology Co., Ltd RoHS Green Product Compliant

bbJconn 步步精科技 Since 1987

深圳市步步精科技有限公司 BBJconn APPROVED 工程部 BBJconn Technology Co., Ltd

TOLERANCE UNSPECIFIED

.	
.0	±0.35
.00	±0.25
.000	±0.15
X.°	±2.00°

CUSTOMER DRAWING

深圳市步步精科技有限公司

TITLE: TYPE-C 24P 母座 L=7.90 CH=1.68 板上四脚插 端子双排SMT 镀金30u 莫仕款 缺P

DRAWN/ DATE	设计	TSP	SIZE:A4	UNIT:MM.	PART.NO: UC.01.52-12-0016
CHECKED/ DATE	审核	LYX	SCALE: 1:1	PROJECTION	REV.: 版本
APPROVED/ DATE	核准	LJP	DWG. PATH	0049-1	SHEET: 页码