bbJconn
Since 1987 步步精科技

REV.	ECN NO	CONTENT	DATE	ENGINEER
A0		Initial release	/	TSP

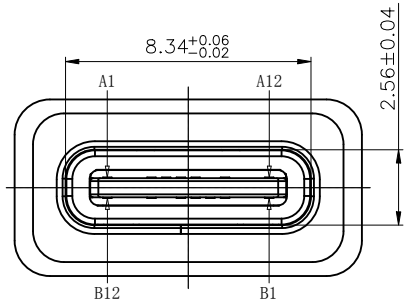

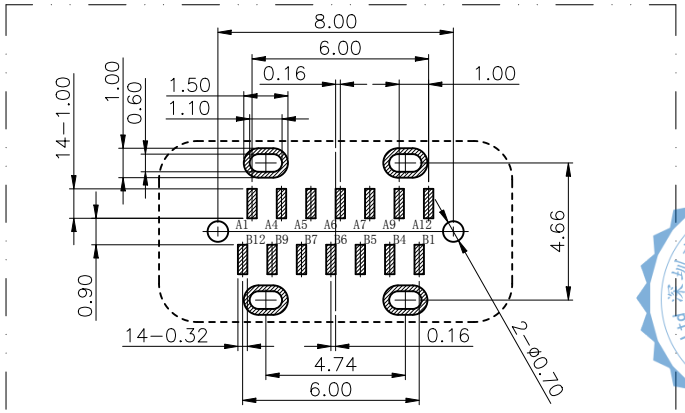

RECOMMEND P.C.B LAYOUT(COMPONENT SIDE)
TOLERANCE FOR PCB LAYOUT IS ±0.05

备注(NOTE):
1. 电气特性:
1.1. 接触区: 接触电阻40mΩ Max,允许10mΩ变化量. 测试条件:20mv, 100mA下测量.
1.2. 接触电流: 3A VBUS引脚; 1.25A用于GND引脚; 其他引脚为0.25A.
1.3. 额定电压: 5V.
1.4. 耐电电压: 100VAC.
1.5. 绝缘电阻: 至少100兆欧 .
2. 机械性能:
3.1. 插入力: 0.5-2.0Kg
3.2. 拔出力: 0.6-2.04Kg
3.3. 插拔次数: 10000次.
4. 工作环境: -20℃ to +85℃.
5. 防水等级: IPX6

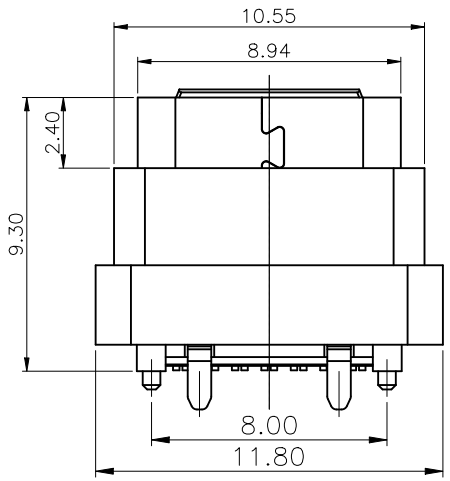

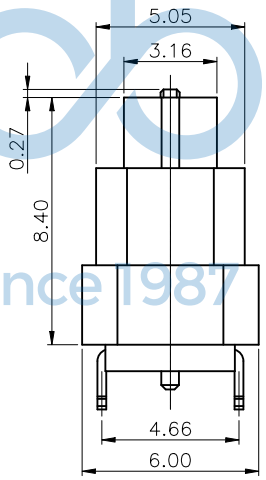

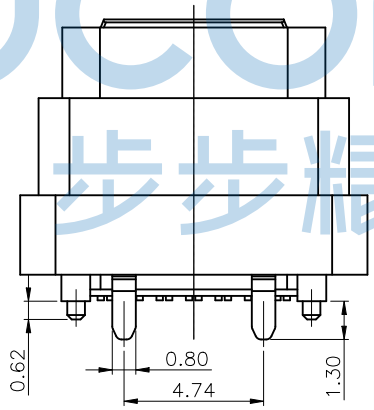

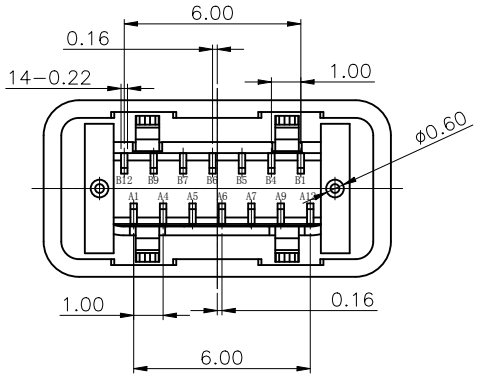

USB TYPE C PIN ASSIGNMENTS

PIN NUMBER	SIGNAL NAME	PIN NUMBER	SIGNAL NAME
A1	GND	B12	GND
A4	VBUS	B9	VBUS
A5	CC1		
A6	DP1	B7	DN2
A7	DN1	B6	DP2
		B5	CC2
A9	VBUS	B4	VBUS
A12	GND	B1	GND

TABLE:

NO	PART	Q'TY	Material
1	SHELL	1	STAINLESS STEEL,NI PLATED
2	CONTACT	14	COPPER STEEL,Au/NI PLATED
3	SHIELDING PLATE	1	STAINLESS STEEL,NO PLATING
4	1MD HOUSING	1	HIGH TEMPERATURE RESISTANT PLASTIC BLACK UL94 V-0
5	2MD HOUSING	1	HIGH TEMPERATURE RESISTANT PLASTIC BLACK UL94 V-0
6	PLASTIC SHELL	1	HIGH TEMPERATURE RESISTANT PLASTIC BLACK UL94 V-0

THIS DOCUMENT IS THE SOLE PROPERTY OF BBJconn Technology Co.,Ltd. Corporation AND SHOULD NOT BE USED IN WHOLE OR IN PART WITHOUT PRIOR WRITTEN PERMISSION.

深圳市步步精科技有限公司

.X: ±0.38 X°: ±3°
.XX: ±0.25 .X°: ±2°
.XXX: ±0.13 .XX°: ±1°

NAME: TYPE C 14P 防水母座 直立式 四脚插 带柱端子SMT H=9.30 舌片外漏0.27 IPX6 加盖编带

APPD.	JM_Zheng	PJ. NO.: 126-224-140001-J2G	
CHKD.	LYX	SIZE: A4	DRW NO.:
DR.	TSP	FINISH: SEE NOTES	MAT'L.: SEE NOTES
PDWG,NO: 0395-1		SCALE: N/A REV.: A0	UNIT: mm PAGE: 1/2

REV.	ECN NO	CONTENT	DATE	ENGINEER
A0		Initial release	/	TSP

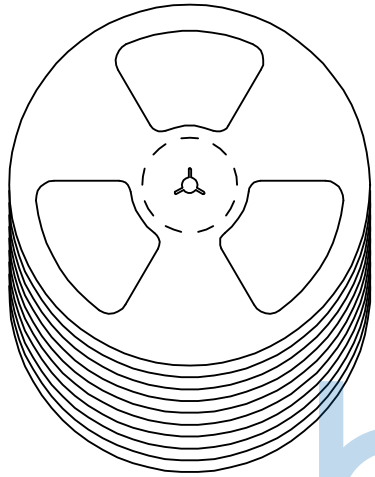

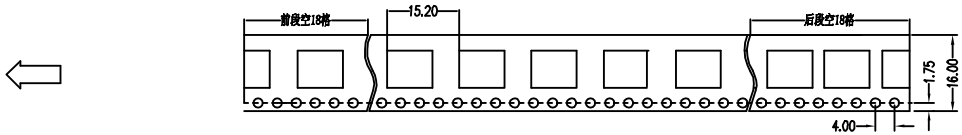

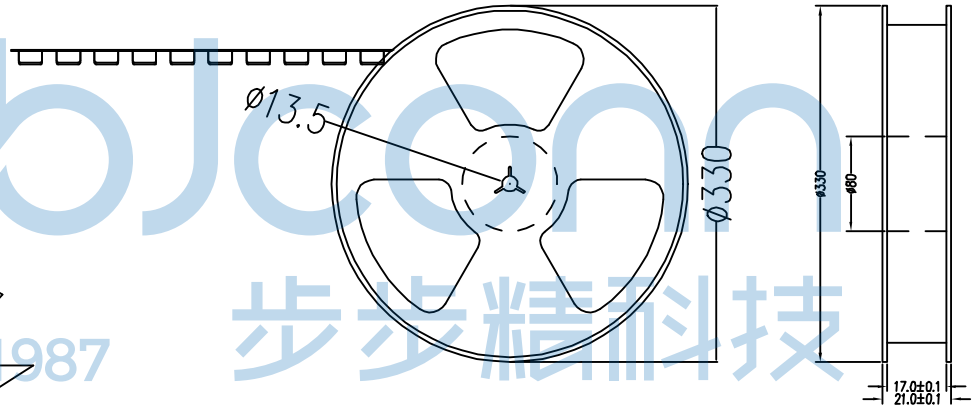

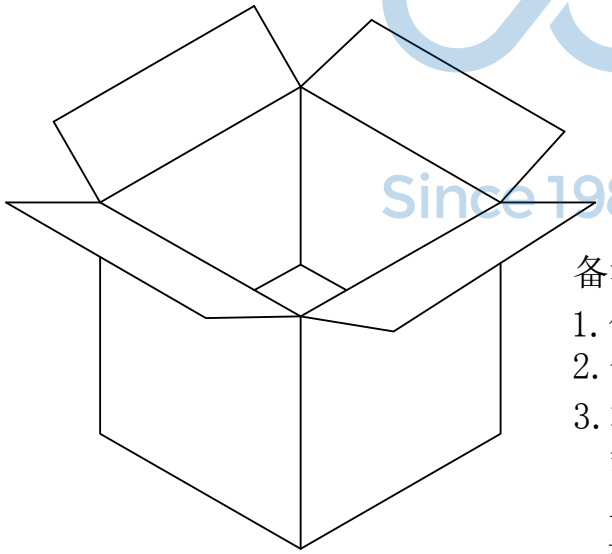

备注：

1. 包装数量：450/PCS/卷，10卷/箱。
2. 包装袋长度：每卷前后各空10-20个空格，中间包装。
3. 材质：
   载体：聚丙烯（PS），
   上带：聚乙烯（PET），
   卷盘：聚苯乙烯。

纸箱规格：345*345*23MM
纸箱规格：345*345*35MM

THIS DOCUMENT IS THE SOLE PROPERTY OF BBJconn Technology Co.,Ltd. Corporation AND SHOULD NOT BE USED IN WHOLE OR IN PART WITHOUT PRIOR WRITTEN PERMISSION.

深圳市步步精科技有限公司

.X: ±0.38 .XX: ±0.25 .XXX: ±0.13	X°: ±3° .X°: ±2° .XX°: ±1°	NAME: TYPE C 14P 防水母座 直立式 四脚插 带柱端子SMT H=9.30 舌片外漏0.27 IPX6 加盖编带
APPD.	JM_Zheng	PJ. NO.: 126-224-140001-J2G
CHKD.	LYX	SIZE: A4 DRW NO.:
DR.	TSP	FINISH: SEE NOTES MAT'L.: SEE NOTES
PDWG,NO: 0395-1		SCALE: N/A REV.: A0 UNIT: mm PAGE: 2/2